ELECTRO-BOILER®

EZB-Edge®

INSTALLATION & OPERATING INSTRUCTIONS

Model: **EZB-E1/4-05-240-1**
EZB-E1/4-07-240-1
EZB-E1/4-10-240-1
EZB-E1/4-12-240-1
EZB-E1/4-15-240-1
EZB-E1/4-17-240-1
EZB-E1/4-20-240-1

APPLICATION: The EZB-Edge is a packaged system complete with boiler vessel, expansion tank, air eliminator, circulating pump and touch screen system interface. It is designed to be used in a variety of radiant hydronic heating applications. These include high mass applications like radiant floor heating or low mass applications like baseboard or radiator heating. Any model can support single or multiple zones. If any single zone provides less than the minimum required GPM of the boiler, purchasing an EZB-Edge model with integrated multi-zone controller option (EZB-E4-**-240-1) is **highly recommended** to enable additional boiler control functions.

This series is equipped with up to four zone control inputs and corresponding pump/valve outputs, backup electric or gas boiler output, auto and manual high limit safety interlocks, power company load management, three temperature sensors (supply, return, and outside).

ACCESSORIES: Installation fill and purge valve EZB-PF100

IMPORTANT: The included expansion tank is shipped loose within the EZB-Edge enclosure. The expansion tank must be installed prior to filling the system. See Mechanical Installation section.

Note: This product meets the requirements of the ASME Boiler and Pressure Vessel Code.

Conforms to: UL STD.UL834
Certified to: CSA STD.C22.2#165

DO NOT DESTROY THIS MANUAL. PLEASE READ CAREFULLY AND KEEP IN A SAFE PLACE FOR FUTURE REFERENCE BY A SERVICE TECHNICIAN.

Intertek

H

ELECTRO INDUSTRIES
Monticello, Minnesota
800.922.4138
www.electromn.com

TABLE OF CONTENTS

INTRODUCTION

The EZB-Edge has been designed to be the complete system package for radiant heat applications. When properly sized, the EZB-Edge will provide the needed hot water to properly heat a space in a single zone or multiple zone application. With its unique WarmFlo® technology the EZB-Edge can easily modulate output temperature based on the level of demand from a single or multi-zone system. Proper design of the radiant system is required to assure minimum required water flow (GPM) through the boiler.

BOILER CONTROL

The EZB-Edge precisely controls output water temperature through an integrated zone controller with PID control algorithm utilizing zones calls, priorities and setpoints, high temp priorities, supply, return and outdoor temperatures.

The EZB-Edge can be operated with a single thermostat or multiple thermostats connected to the corresponding R-W Zone Call terminals. Up to four zone thermostats can be connected for multiple zone control through the integrated zone control capabilities. Do not jumper the R-W Zone Call terminals for hot boiler application. This will cause uncontrollable heat demand and a possible high limit safety lockout of the boiler elements resulting in no heat output.

The EZB-Edge can be used in dual heat/dual fuel applications. Existing components should be evaluated for removal as the EZB-Edge contains components that can be used by both systems. If you are considering adding an electric boiler to relatively new existing gas boiler system, contact the factory for additional information.

Boiler control settings are configured using the touch screen system interface. Refer to the touchscreen configuration section of this document.

NOTE: This model series is designed and equipped for 240-volt residential, single phase. If this unit is used on 208-volt, energy capacity is reduced by approximately 25%. The installed transformer has a primary tap for 208-volt. Rewire the internal transformer so the boiler is using this primary tap for 208-volt applications.

APPROVED TUBING/PIPING

When plumbing this boiler and its peripheral parts to the hydronic loop system, all plumbing parts and/or tubing must be sealed to prevent entrance of oxygen.

Use only tubing or polyethylene tubing with oxygen Diffusion Barrier.

INSTALLATION REQUIREMENTS

1. All installation work should be performed by trained, qualified contractors or technicians. Anyone installing this boiler should carefully study this manual prior to installation to get familiar with and plan how the boiler will be installed.

⚠ WARNING

ALL ELECTRICAL WIRING MUST BE IN ACCORDANCE WITH NATIONAL ELECTRIC CODE AND LOCAL ELECTRIC CODES, ORDINANCES, AND REGULATIONS.

⚠ WARNING

OBSERVE ELECTRIC POLARITY AND WIRING COLORS. FAILURE TO OBSERVE COULD CAUSE ELECTRIC SHOCK AND/OR DAMAGE TO THE EQUIPMENT.

⚠ CAUTION

This unit can only be used for its intended design as described in this manual. Any internal wiring changes, modifications to the circuit board, modifications or bypass of any controls, or installation practices not according to the details of this manual will void the product warranty, the ETL/Intertek certification, and manufacturer product liability. Electro Industries, Inc., cannot be held responsible for field modifications, incorrect installations, and conditions which may bypass or compromise the built-in safety features and controls.

2. This installation manual and Electro-Boiler products relate only to the addition of the Electro-Boiler to the hydronic system. The owner/ installer assumes all responsibility and/or liability associated with any needed installation of the gas/oil boiler, pump, plumbing, system design, hydronic systems or backup gas/oil boiler, etc. Any instructions or comments made within this manual (or factory phone assistance) relating to the gas/oil furnace are provided as comments of assistance and helps only.

⚠ CAUTION

Hazards or unsafe practices could result in property damage, product damage, severe personal injury and/or death.

3. Remember, safety is the installer's responsibility, and the installer must know this product well enough to instruct the end user on its safe use.

   Professional installers have training and experienced practices for handling electrical, sheet metal, and material handling processes.

SYSTEM OR WATER FLOW

In order to prevent hi-limiting and assure full 20 -year element life, the piping system/basic plumbing/circulator pump must be arranged to provide flow greater than minimum GPM shown in Table 1 below. If zoned system, this applies when the smallest zone is operating.

TABLE 1 - ELECTRO-BOILER SPECIFICATION

Model	Volts	Phase	Watts	Btu/h	Amps	CB	GPM MIN
EZB-E1/4-05-240-1	240/208	1-60 Hz	5,000/3,500	17,060/12,795	21.8A/18A	30A	1.0
EZB-E1/4-07-240-1	240/208	1-60 Hz	7,000/5,300	23,885/17,913	29A/25A	45A	1.0
EZB- E1/4-10-240-1	240/208	1-60 Hz	10,000/7,500	34,121/25,591	42A/36A	60A	2.0
EZB- E1/4-12-240-1	240/208	1-60 Hz	11,500/8,600	39,239/29,429	48A/41.5A	60A	2.0
EZB- E1/4-15-240-1	240/208	1-60 Hz	15,000/11,300	51,182/38,386	62.6A/54A	30A +60A	2.0
EZB- E1/4-17-240-1	240/208	1-60 Hz	17,500/13,100	59,712/44784	73A/63A	45A+60A	2.0
EZB- E1/4-20-240-1	240/208	1-60 Hz	20,000/15,000	68,242/51,182	83A/72A	60A+60A	2.0

Circulating Pump, all boiler models	120V 60 Hz	0.54 Amps	10A CB

BOILER/PIPING PLACEMENT

This model series is wall hung and the vessel must be installed in a vertical position, drawing BX603.

Additional plumbing items are located below the boiler housing itself as shown on drawing BX603.

For future servicing, the boiler itself **must be installed 18"** or more above the floor to service or replace heating elements if needed. The elements are screwed in from the bottom of the vessel.

INFORMATION/WATER FLOW CALCULATIONS

Water flow, GPM, can be estimated if the temperature rise across the electric boiler can be measured.

The formula below can only be used when the temperature rise is stable, and the boiler is not hi-limiting. In other words, verify constant current draw and stable outlet temperatures for at least 15 minutes.

$$GPM = \frac{\text{Volts x Amps x 3.4}}{\text{500 x Temp. rise}}$$

CLEARANCES

	MINIMUM CLEARANCE		SUGGESTED MINIMUM SERVICE CLEARANCE	
LEFT	2 INCHES	51 MM	12 INCHES	305 MM
RIGHT	1 INCH	26 MM	12 INCHES	305 MM
BACK	0 INCHES	0 MM	0 INCHES	0 MM
FRONT	1 INCH	26MM	21 INCHES	534 MM
TOP	5 INCHES	127 MM	14 INCHES	356 MM
BOTTOM	1 INCH	26 MM	14 INCHES	356 MM
SURROUNDING AMBIENT TEMPERATURE MUST NOT EXCEED 90° F/32° C				

⚠ CAUTION

For all installations, whether in a room or enclosed space, adequate ventilation must be provided so this boiler's surrounding ambient temperature **does not** exceed 90° F/32° C.

⚠ WARNING

FOR SAFETY REASONS ALL COMBUSTIBLE AND NON-COMBUSTIBLE MATERIALS MUST BE KEPT AT LEAST ONE INCH AWAY FROM ANY SURFACE OF THIS BOILER.

⚠ CAUTION

This electric boiler is ONLY designed for indoor installations. It is NOT designed for outdoor installation.

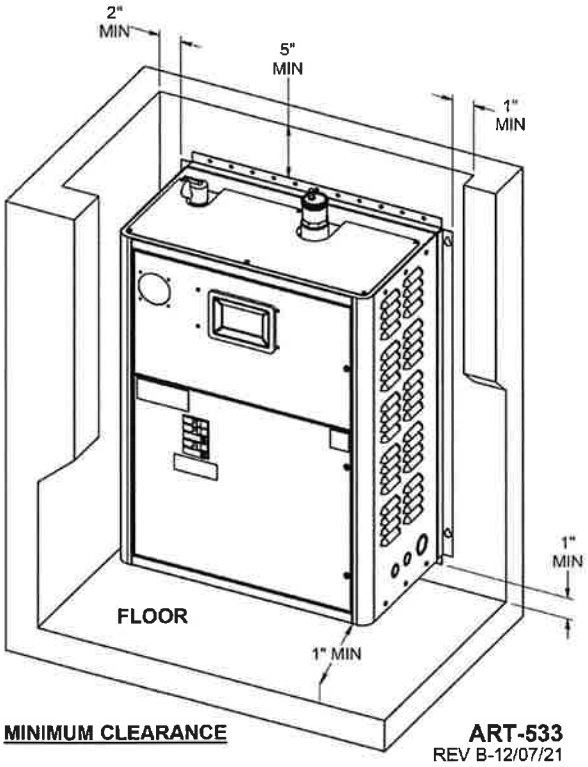

MINIMUM CLEARANCE

ART-533
REV B-12/07/21

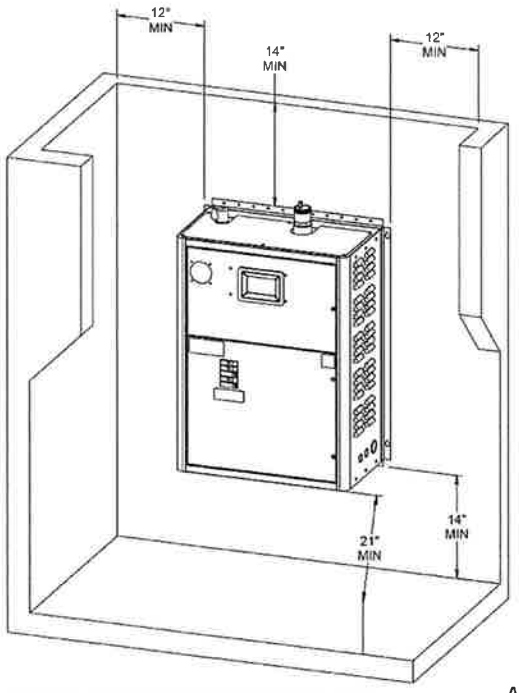

SUGGESTED MINIMUM SERVICE CLEARANCE

ART-546
REV A - 12/07/21

MECHANICAL INSTALLATION

⚠ CAUTION

Electro Industries Inc. requires the use of dielectric isolation between the boiler supply and return piping when the boiler is plumbed using copper or any other dissimilar metal. Damage to the vessel caused by galvanic corrosion voids Electro Industries' warranty.

Reference drawing BX603

1. Unpack the EZB-Edge boiler. Shipped loose from the boiler are outdoor sensor, pump check valve and mounting assist bracket.
2. The mounting assist bracket is used to hold the boiler in place during installation. Locate where the bottom of the boiler will be on the wall. Securely fasten the mounting assist bracket to the wall with the bent flange sticking out. This will allow you to "rest" the boiler between the flange and the wall while the boiler is secured to the wall installing mounting bolts through side and top boiler flanges.

   Do not remove the mounting assist bracket until you have securely bolted the boiler to the wall. The unit must be positioned with the vessel **vertical**. The unit will not function properly with the vessel in a horizontal position. **NOTE:** Mount **at least 18 inches above the floor** to allow for ease of element removal in the event element service is required.
3. **Expansion tank installation** – the expansion tank is included but shipped loose within the EZB-Edge and must be installed prior to filling the boiler and system with fluid.

   ⚠ CAUTION

   Use proper tools to install expansion tank. Attempting to tighten by hand will result in damage to the expansion tank.

   a. Remove and unpack the expansion tank from within the EZB-Edge enclosure.
   b. To prevent water leaks, apply Teflon tape or suitable thread sealant (not included) to the threaded nipple of the expansion tank.
   c. Thread the expansion tank into the designated shutoff fitting located at the bottom of the air eliminator assembly. Use a 7/8" wrench to tighten the expansion tank at the designated fitting on the expansion tank. **DO NOT ATTEMPT TO TIGHTEN BY HAND.**
   d. Open the shutoff valve between the expansion tank and air eliminator assembly. Failure to open the valve will create problems when pressurizing the system during fill procedures.
4. The key mechanical components included with the EZB-Edge are:
   - **Expansion Tank** – provides constant system pressure. The expansion tank is pre-charged to 12psi.
   - **Air Vent/Inline Air Separator** – provides a means to trap and remove air from the hydronic system. Loosen small cap on top of air eliminator to allow air to purge. Tighten cap to finger tight only after system has been sufficiently purged of all air. This can take several days.
   - **Pressure Safety Valve** – 30psi pressure relief valve will release water when system pressure exceeds 30psi. During purging there is a requirement to bleed out the initial air within this 1" pipe leg by manually holding open the relief valve. Add the necessary pipe extension to the relief valve and extend to within 6" of the floor to prevent water damage on this unit or surrounding area. This may be required by local code.
   - **Circulating Pump** – the included pump provides water flow throughout the hydronic system. This is a 3-speed pump, shipped from the factory set to high speed. The pump speed may be adjusted as needed for ideal system temperature rise. Electro recommends allowing your hydronic system to warm to desired temperature before adjusting pump speed. A pump check valve is shipped loose with the EZB-Edge. For single pump systems it is not required. If the EZB-Edge is piped in conjunction with a fossil fuel boiler with internal pump, the check valve may need to be installed. Contact the factory for more information.

5. Piping between the EZB-Edge and hydronic system manifolds is shown on drawing BX603. When following this diagram, the water fill procedure becomes very simple and almost guarantees the removal of all air or prevents air locking problems. Experienced hydronic heating installers may be able to eliminate some components, but the inclusion of these components guarantees installation and initial operating success. Material used for piping between the EZB-Edge and the manifolds may include copper, black iron or oxygen barrier PEX tubing rated for hydronic heating.
6. When connecting pipe of dissimilar metal to the inlet and outlet of the boiler, dielectric unions must be used.
7. To ensure safe boiler operation, adequate system pressure must be maintained. Once all the air is purged form the system, adding additional water may be required to bring the system up to operating pressure, 12-20 psi.
8. Depending upon water conditions, determine whether water additives are necessary.
9. Purge and fill the boiler. Do not allow the electric element(s) to come on until the system is purged and proper water circulation is verified. If the pump is needed, jumper the two orange wires in order to operate the pump directly from its own 120-volt source.
10. Purge each loop individually, one at a time.
11. Check for system leaks.

WATER ADDITIVES/TREATMENT

Water treatment is strongly suggested to prevent scale deposits, corrosion from acids, oxygen, and other harmful elements within the specific water supply. It is the installer or user's responsibility to verify water quality and maintain acceptable water quality throughout the life of this product.

As a minimum the following water properties must be considered:

- Hardness (ppm): 0-10
- pH: 7.5-10
- Iron Content (ppm): 0-20
- Oxygen Content (ppm): 0
- Total Dissolved Solids: 0-5000

Up to a 50/50 propylene glycol mixture is acceptable for use in these boilers

WATER FILL PROCEDURE

The following procedure applies to non-glycol or antifreeze and prepackaged plumbing kit and/or when the system is plumbed exactly as shown on drawing BX603.

⚠ CAUTION

If the building supply pressure is connected directly to supply water ball valve without pressure reducing regulator, user needs to make sure the pressure within the boiler loop does not exceed 30 PSI. Careful control of the supply water ball valve opening can take care of this. Also, at steps 6 and 10, use caution to make sure the building water supply pressure does not spike the system.

1. Do not apply 240/208-volt heating power during water fill sequence.
2. Connect the temporary household water supply source (probably hose connection) to the water supply connection input.

   NOTE: If water supply connection is permanent, some local building codes may require special anti-siphon check valve, RPZ check valve, or equivalent between the boiler fill regulator and the domestic water source or the city water connection.
3. Connect a drain hose to hose bib, drain valve.
4. **Open** drain valve and **close** ball valve (between drain valve and boiler). This will ensure water flushes in one direction through the system.
5. Verify any hydronic manifold valves are **open**.
6. **Open** water supply valve and **open** household water supply source.
7. Allow water to circulate, discharging through drain valve, for at least 15 minutes.
8. **Close** both the inlet and drain valves.
9. Slowly **open** the inlet valve until the cold system pressure at the gauge reads 12 to 20 psi, then **close** the valve.
10. Loosen the air bleed cap on top of the air eliminator.
11. Optional – to purge any remaining air in the system, energize the circulating pump by inserting a jumper across the R-W terminals on the boiler control board. Temporarily removing the blue jumper at the blue-blu/wht terminal will prevent elements from activating during this process. Run circulating pump for 30 minutes. If a significant amount of air is removed and the boiler pressure drops below 10 psi, slowly open the water inlet valve to build water pressure to 12 to 20 psi.
12. Once the boiler pressure is stable, disconnect the water supply.

COMMENT: Purge one loop at a time.

MULTIPLE ZONES AND RADIANT TEMPERATURES

EZB-Edge Integrated Zone Control – this product has an integrated zone controller which receives thermostat heat calls directly and controls manufacturer installed relays to engage field supplied zone valve(s)/pump(s). The thermostats are directly connected to the respective R-W Zone Call terminals located at the top of the control board to turn on the boiler and the associated zone output pumps/valves relays. Each Zone output can be configured to a temperature range of 50°F to 180°F. Existing zone controllers can be used in place of or along with the integrated zone control (see following sections).

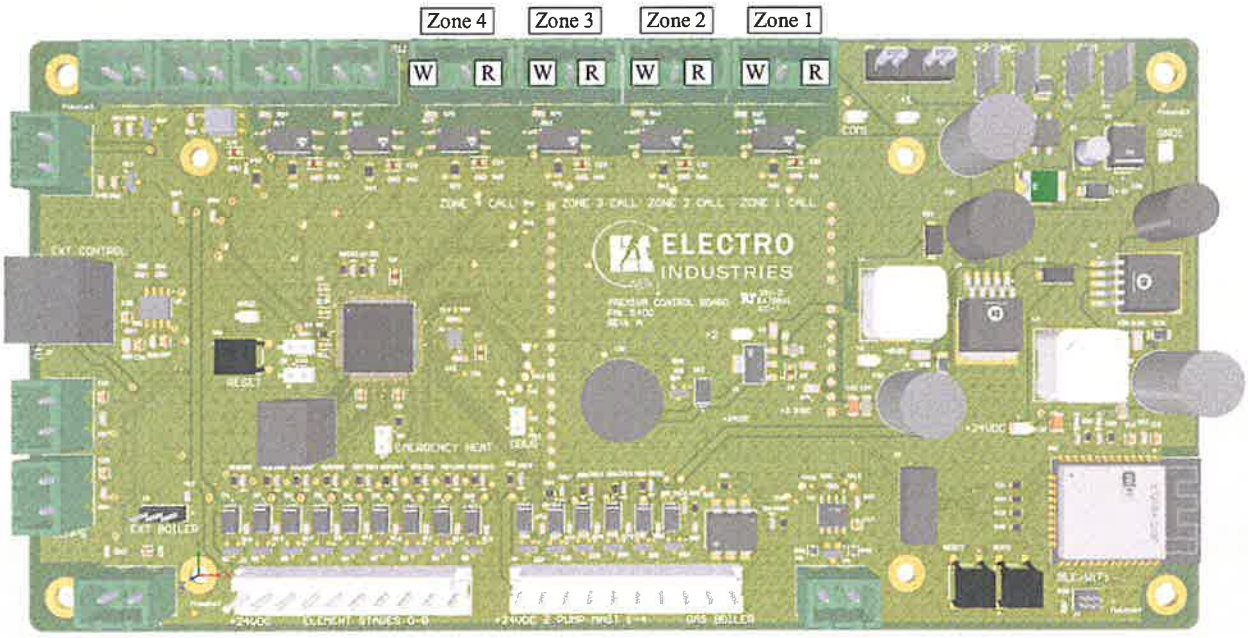

Other Zone Controllers – to utilize existing system zone controllers or direct thermostat control with the EZB-Edge model series, connect the end switch, x-x, or NO/C terminals of the existing zone control system to the R-W zone call terminals of the EZB-Edge controller. With direct thermostat control of zone valves, connect the end switches of the valves to the R-W zone call terminals of the EZB-Edge controller. Then configure the pump pre-purge for each zone to activate in zero seconds to enable boiler staging immediately on external controller heat call (see touchscreen configuration section).

Same water temperature all zones – to command the same water temperature to each zone configure the zone temperature setpoints to the same temperature with no zone high temp priorities enabled (see touchscreen configuration section). Connect the EZB-Edge pump relays to the external routing valves/pumps. If zone valves are directly controlled by each zone thermostat or an external zone controller, configure the desired output water for each zone the same as above (see touchscreen configuration section). The EZB-Edge will provide water flow through the master pump circulating the water to a valve manifold. The external controller (thermostat or zone controller) connects directly to the manifold containing the various zone valves. The end switches of the respective zone valves (Zones 1-4) are connected to the corresponding R-W Zone Call terminals to enable proper heat call activation.

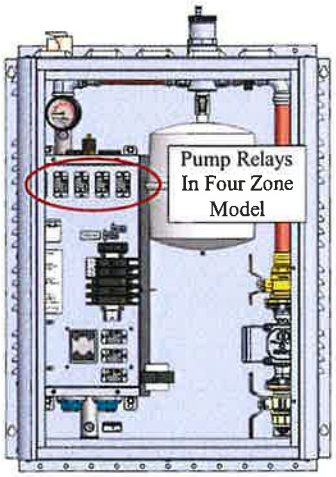

INTEGRATED ZONE CONTROLLER

The following are three suggestions or reasons why using an external zone controller is not needed and does not enhance overall performance beyond the already integrated zone control capabilities.

1. **Zone wiring and troubleshooting convenience** – the integrated zone controller allows for easy terminal block and point to point wiring for each zone thermostat and each zone valve/pump. Also, there are LED and touch screen indications associated with the thermostat action and the zone pump/valve action. This greatly simplifies wiring and future troubleshooting with a neat terminal block wiring arrangement.
2. **Prevents over control or false staging up and down when the temperature sensors are attempting to regulate** – since the zone controller in the EZB-Edge is integrated in the zone controlling algorithms, the use of an external zone controller cannot provide smoother boiler temperature control; only boiler on/off events. The zone controller, coupled with the touch screen interface and thermistor temperature sensors, has precise setup capabilities for each zone. Installers select water temperature outputs based on the heating application. When dialing in the temperature output for the heating application, the zone controller algorithm enables efficient fast acting boiler staging to handle that capacity. Also, the system will handle multiple zone calls at any one time through initialization of zone priority handling. The temperature of the highest priority gets serviced first until no heat calls remain.
3. **Multi-temperature system with unbalanced zones** – if the application includes one or more zones requiring high temperature (fin tube, air handler, etc.) with the remaining zones designated radiant floor low temperature, the integrated zone controller can handle this by enabling a high temp priority for the respective zone enabled (see touchscreen configuration section). Once enabled and a heat call active, the integrated zone controller will automatically raise the output of the high temperature priority zone to meet the specified setpoint. Since this is a priority arrangement, the integrated controller enables water flow in the high temp priority zone and prevents water flow in the other zones while the high temperature heat call is active. If at the end of the high temperature zone there is a call on any of the remaining low temperature zones, there will be a pump only function until the outlet temperature drops below associated temperature setpoint of the commanded zone.

ZONE VALVES/CIRCULATORS

It is recommended to use zone valves or pumps (if a greater GPM is required) connected to the relay outputs provided in multi-zone applications with the EZB-Edge boiler (integrated multi-zone relay control only provided in models: EZB-**E4**-**-240-1).

ROOM THERMOSTAT PLACEMENT

Fin tube radiation, fan coil, etc. – heat only wall thermostat, connected to operate zone valves (see previous section) or for single or multiple zones the thermostat is connected directly to the respective EZB-Edge R-W zones.

Floor radiant – comfort and proper space heating response is a direct relationship to the thermostat type and the placement of the thermostat sensing bulb. Typically, an under-floor heating system can be broken down into three categories.

A. **Energy storage, water tubing is under the concrete or within the sand base** – the controlling thermostat must have a remote bulb, and this remote bulb must sense the concrete slab temperature (slab stat). Coordinated with the concrete pour, install a ¾" PVC, minimum bend radius of 7 inches, and locate at approximately center (vertical) of the concrete slab. The thermostat sensing bulb can later be pushed down this PVC conduit. If the slab is already poured without conduit for slab stat, use electronic remote sensing thermostat.
B. **Floor covering, medium to high insulation** – use slab stat as described in paragraph A above.
C. **Quick response, hydronic tubing just under the concrete surface, no flooring material over the concrete** – in this case, heated water can directly radiate into the room, a standard wall mount room thermostat is adequate. Mount room thermostat on an inside wall similar to most heating systems.

ELECTRICAL HOOKUP

Reference drawing BH601

1. **240/208-Volt Heating Power** – route and install the proper current carrying conductors from service panel fuse or circuit breaker. See Specification Table and/or product nameplate for ratings. These models contain built-in circuit breakers and meet the requirement for local disconnect for appliances greater than 10 kW. Connection is at the circuit breaker terminals. If using single feed method, a single feed bus is required, order part number 5701.
    - Only copper wire is allowed.
    - Circuit Breaker 1 is highest priority stage.
2. **Grounding** – copper conductor is required, size per NEC code relating to the current of each feed.
3. **120-Volt Circulating Pump Power** – route and install the proper current carrying conductors from service panel fuse or circuit breaker, 10-amp maximum. These models contain a built-in 10A circuit breaker. Wire connection is at the circuit breaker and neutral/ground terminals.
    - Only copper wire is allowed.
4. **Operating Thermostat** – two types can be used.
    - **Standard Mechanical/Digital** – connect to R and W, upper right.
        - Depending on stat type, set heat anticipator to .2 or cycles per hour settings to 1-2
    - **Floor Sensing Stat** – connect to R and W, upper right. Place slab sensor in the slab.
        - If needed, can connect thermostat C to boiler C.

    NOTE: Power robbing/power stealing thermostat – if you have a power robbing or power stealing thermostat, you must use the resistor included with the thermostat. Place this jumper between boiler W and boiler C. If resistor is not used, intermittent boiler operation is possible.

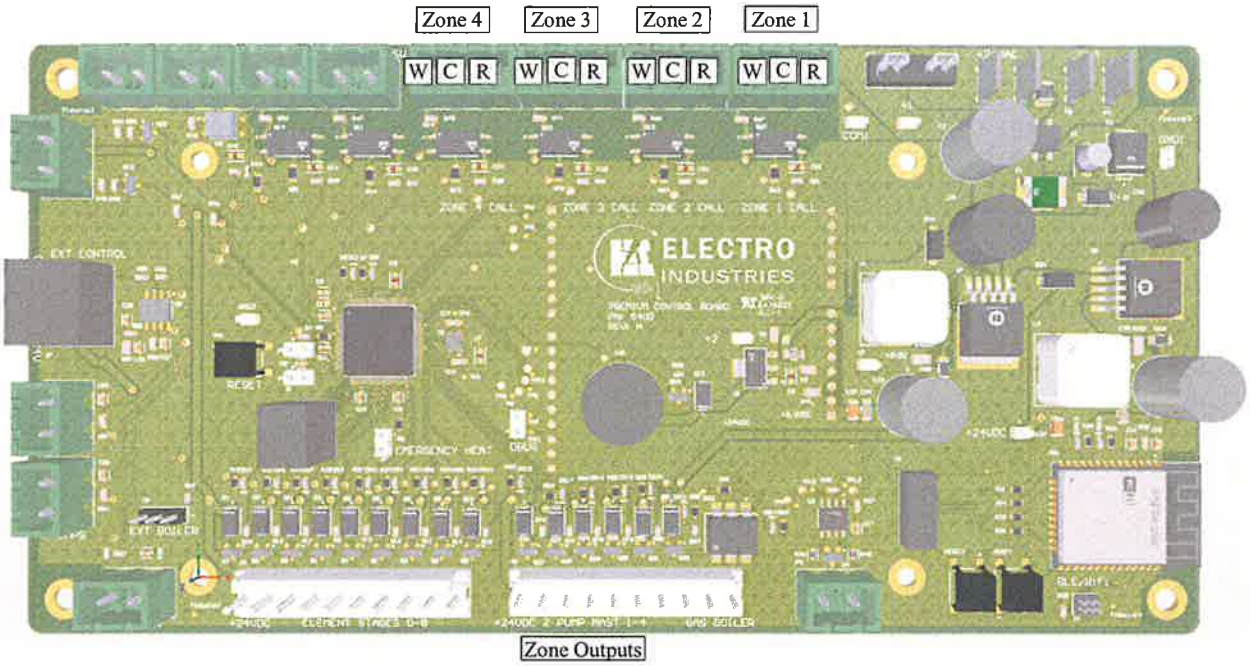

5. **Load Management Interrupt Control (LMC)** – this Electro-Boiler series has been factory jumpered and designed for an external utility load management receiver connection. The control board upper left terminal block marked LOAD MAN SW with a BLU factory installed jumper represent the two contact points, connect these contacts to the utility load control device. As shipped,

this unit is only equipped for off-peak = N.C. logic. If reversed logic is required, contact the factory for recommendations.

- Optional – if load management is not used, simply keep the blue jumper in place.
- Optional – if the power company disconnects 240V for load control, contact factory for drawing BH029 for special wiring requirements via 240v relay.

6. **Outdoor Sensor** – the loose OT sensor needs to sense true outdoor temperature. Mount on an outside wall position that will represent the most accurate outdoor temperature. If possible, shade from direct sun rays. Maintain a distance of 3 feet from dryer or other exhaust vents. Sensor length is 25 feet. The sensor can be extended up to 50 feet by splicing on a 2-conductor low impedance wire. Secure wire connections should be made to prevent inaccurate or false sensor readings to the control board. For peak system performance the outdoor sensor should be used. If not using the outdoor sensor you must verify warm weather shut down is disabled.
7. **Zone Valves or Zone Pumps** – see Zone Valves/Circulators and Integrated Zone Controller section for more information.

⚠ WARNING

IF ZONE VALVES RECEIVE THE CONTROL SIGNAL THE END SWITCHES FROM THE ZONE VALVES **MUST BE** AN ISOLATED CONTACT WITH NO VOLTAGE PRESENT ON THESE WIRES OR SCREW TERMINALS. THIS IS VERY IMPORTANT TO MAKE SURE THERE ISN'T ANY INTERFERENCE OR FEEDBACK BETWEEN THE TRANSFORMER OPERATING THE ZONE VALVE SYSTEM AND THE TRANSFORMER WITHIN THIS ELECTRO-BOILER PRODUCT. ONCE THIS HAS BEEN DETERMINED, ALL END SWITCHES ARE SIMPLY PARALLELED WITH THE TWO WIRES GOING TO THE RESPECTIVE R AND W ZONE TERMINALS ON THE EZB-EDGE BOILER.

8. **Low Water Cutoff (LWCO)** – a low water cutoff is **not** included or manufacturer required for the boiler. However, one can be added to the circuit at the terminal block marked LWCO SW in the upper left of the control board. Simply wire the field supplied LWCO normally closed contact to this terminal.

9. **Flow Switch** – a flow switch is **not** included or manufacturer required for the boiler. However, one can be added to the circuit at the terminal block marked FLOW SW in the upper left of the control board. Simply wire the field supplied normally closed flow switch to this terminal.

TOUCHSCREEN CONFIGURATION

The touchscreen is broken down into five main pages (Logo Page, Main Page, Status Page, Setup Page, and Diagnostics Page), various sub-pages for initialization, and factory password protected boiler initialization. The following diagram outlines the core pieces of the interface. Each section and the associated functions are described in the following paragraphs.

With its unique WarmFlo technology the EZB-Edge can easily modulate temperature output based on any level of demand from a single or multi-zone system. Proper design of the radiant system is required to assure minimum required water flow (GPM) through the boiler.

TOUCHSCREEN OVERVIEW AND NAVIGATION

The EZB-Edge Touchscreen Interface consists of three main sections with multiple subsections for proper setup and configuration: Factory Initialization, Runtime Operation, and Boiler Configuration sections. Each of the diagrams below illustrate how the sections are related and how to navigate the interface.

Factory Initialization

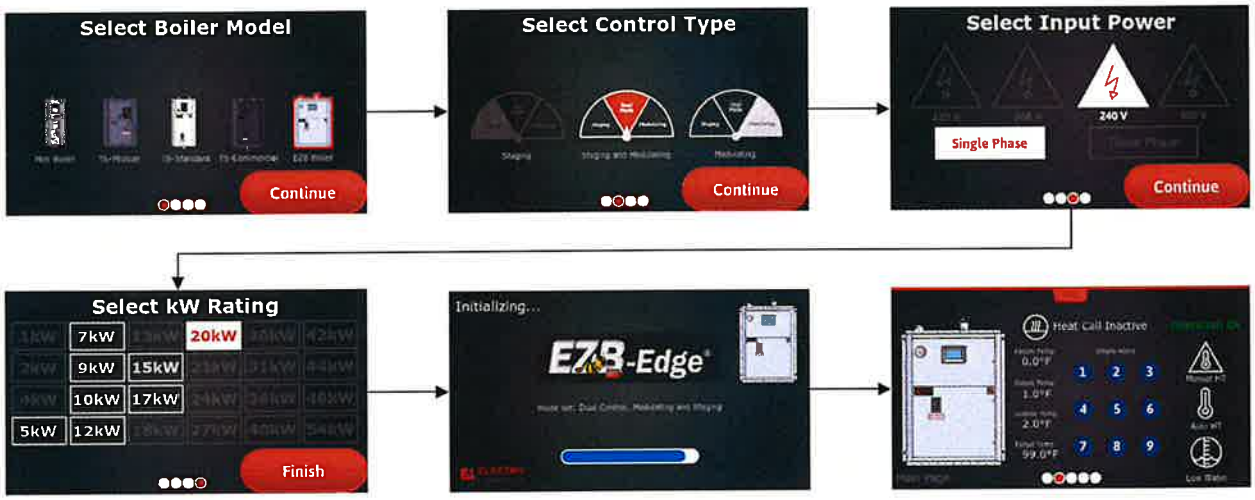

Runtime Operation

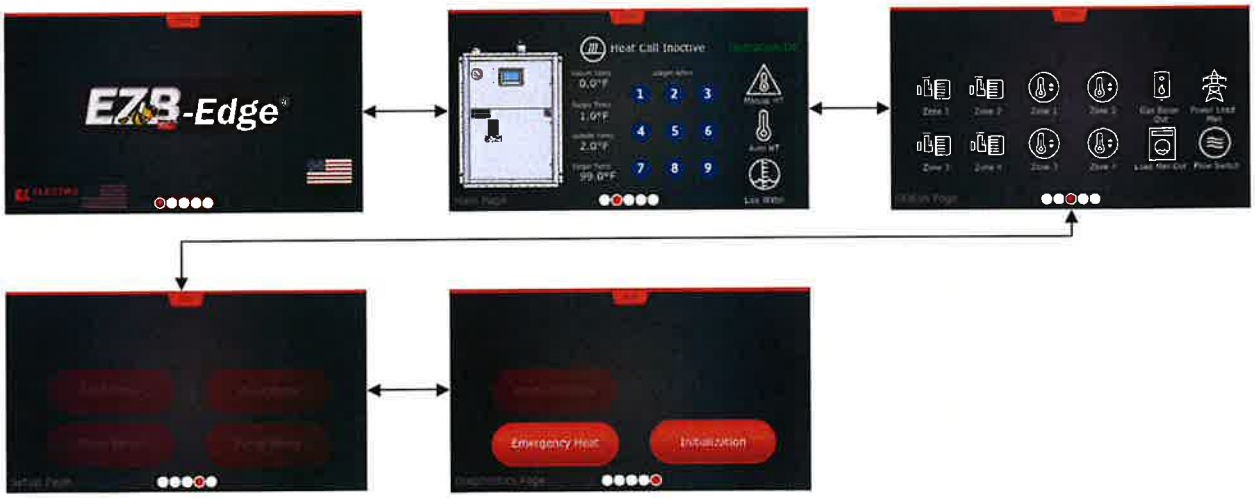

Screen Overview – Setup Page (Zone and Temperature Setup Subsections)

Zone Setup

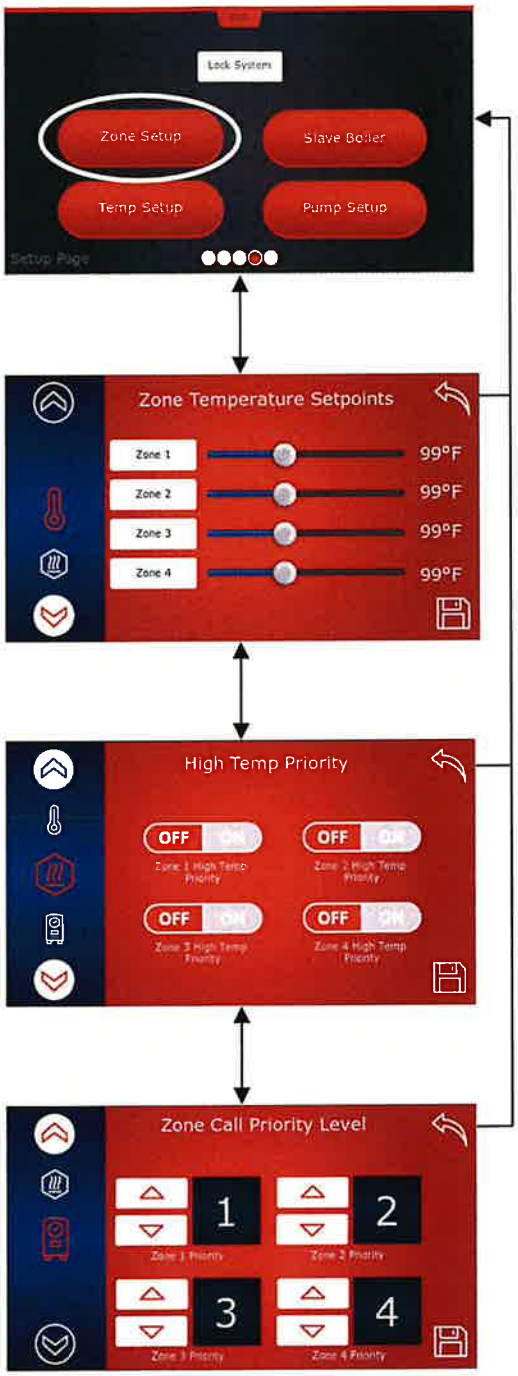

Temp Setup

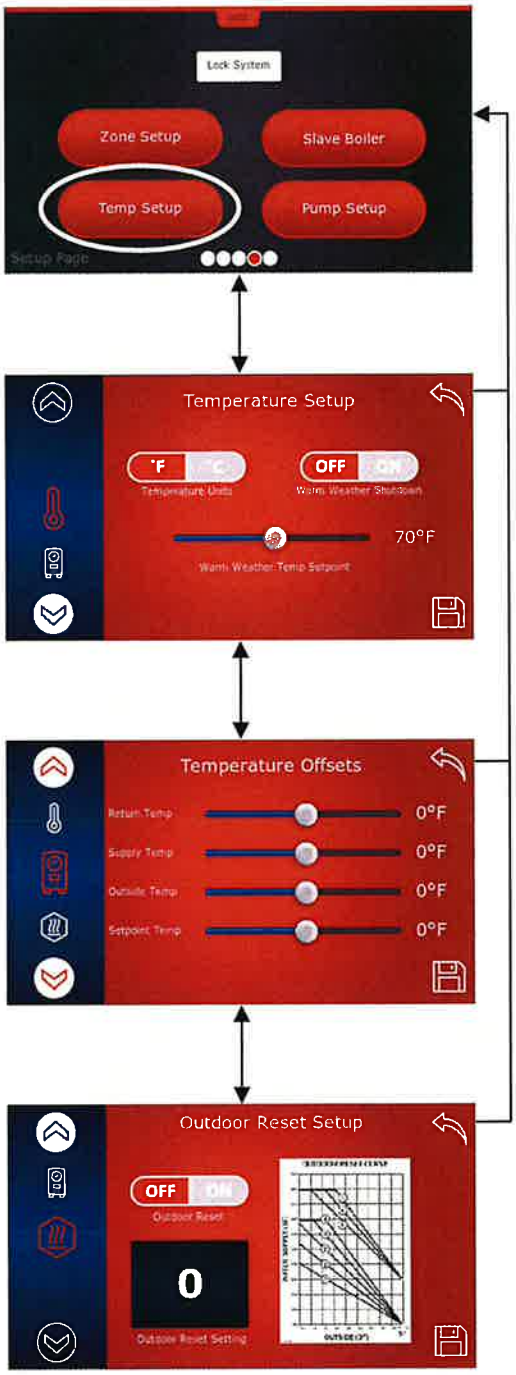

Screen Overview – Setup Page (Slave Boiler and Pump/Valve Setup Subsections)

Slave Setup

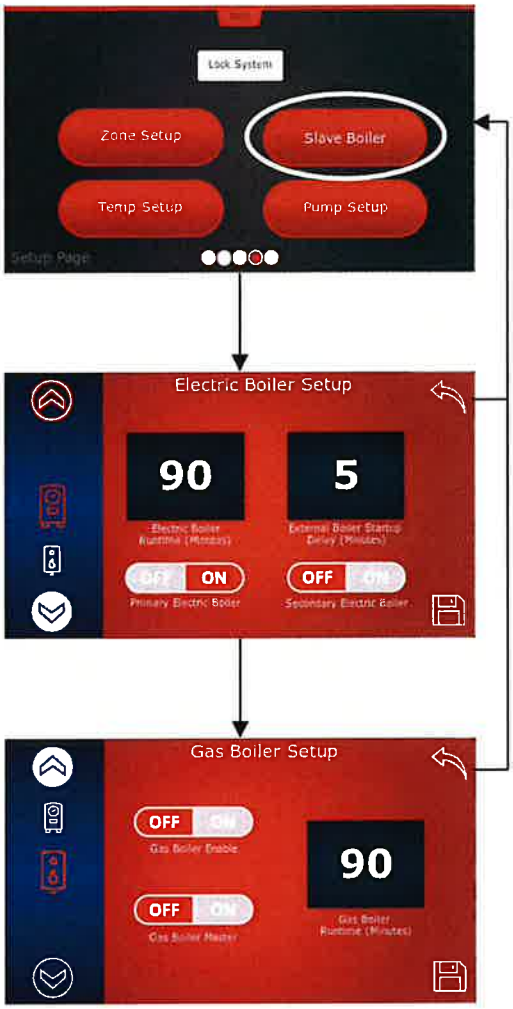

Pump Setup

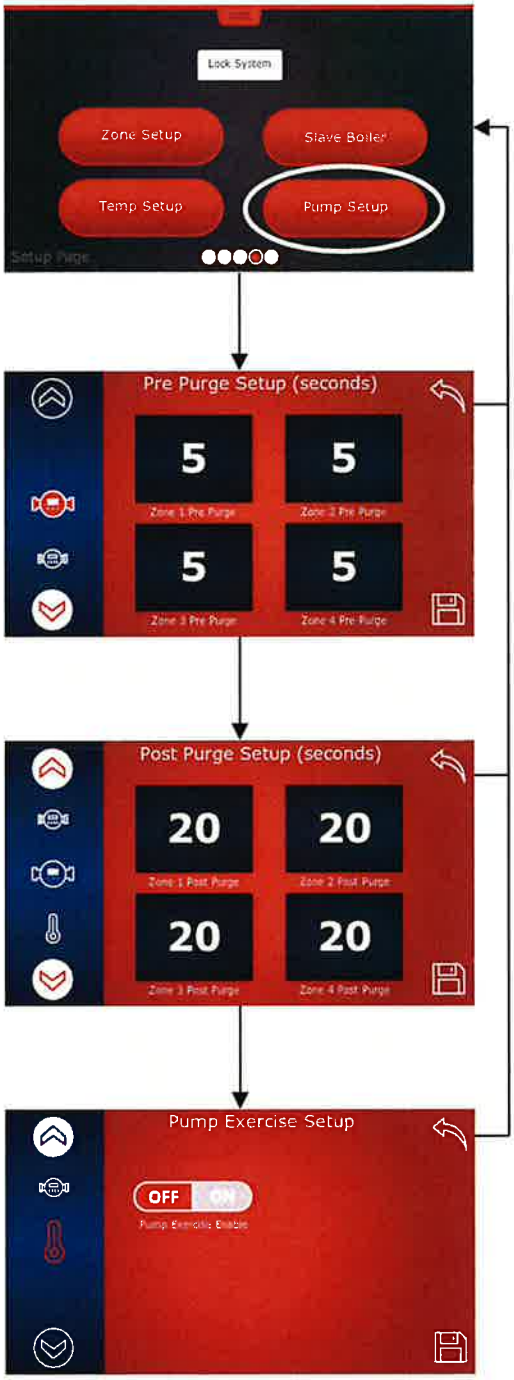

Screen Overview – Diagnostics Page

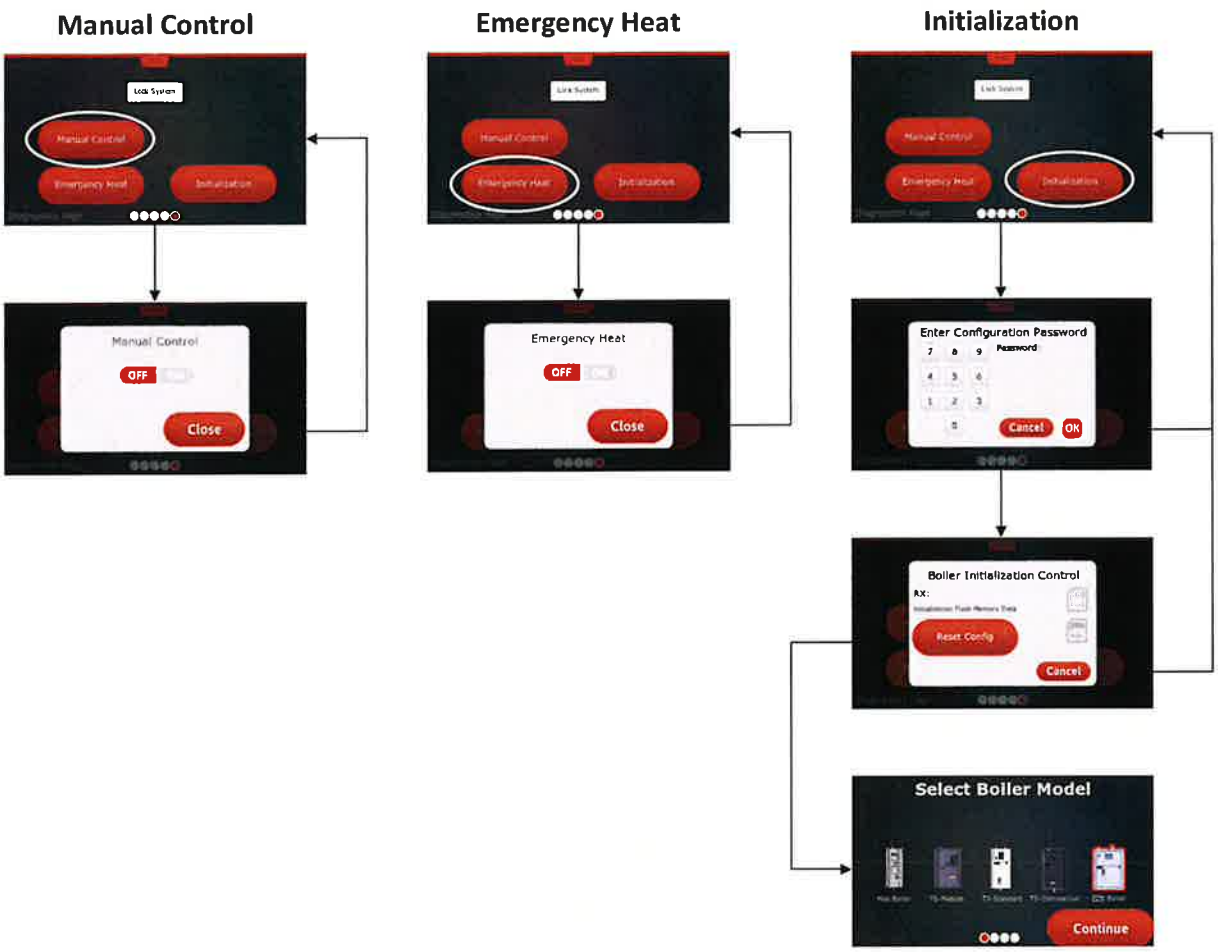

RUNTIME OPERATION

Overview

1. During normal operation there are five main screens which can be accessed with information displayed. The primary screen and the screen which the 'Home' button in the upper dropdown will navigate to the 'Main Page' with the temperature reading, element status, and error status.

Home Page

1. During all operating conditions this page provides the ability to change the visible language of the interface between English, French and Spanish. Pressing on the selected flag brings up the three available options. While the menu is expanded select the desired system language. Swipe screen to move to the next page.

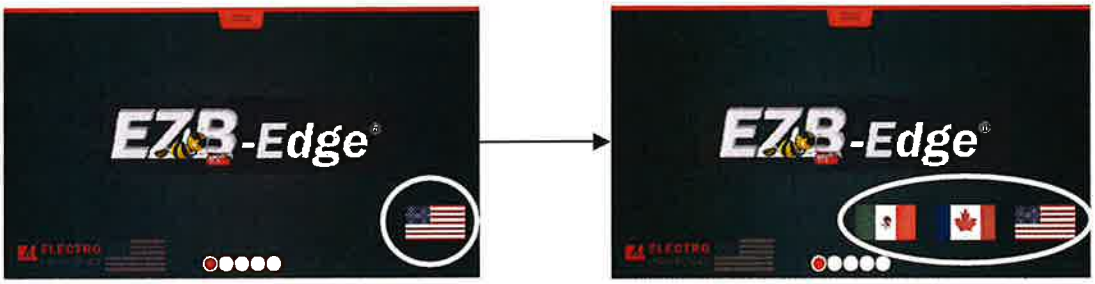

Main Page

1. During normal operation this page provides the visibility to the current overall state of the system including active heat calls, error icons, and temperatures (Supply, Return, Outside and Setpoint). Touching the boiler image on the left will give a view inside your boiler. An active heat call will indicate with a red emblem in the top center with 'Heat Call Active'. Normal operation is indicated in the upper right with 'Operation Ok'.

2. A system that has an error in operation is indicated in the upper right with 'Operation Error!', these errors are as follows:
   Thermal disk activation of the Manual High Limit switch.
   Thermal activation of the Auto Reset High Limit.
   Thermal activation of the Low Water Cutoff.

   Depending on the boiler model, the Low Water Cutoff inputs may be connected with a wire on the main control board if they are not present. The following respective error images/instructions are only available when pressing an active error or in Manual Mode (consult Factory or Service Technician). If one of these three errors are present a high-pitched buzzer will sound on the main control board. Pressing the red error icon will silence the buzzer and bring up basic error instructions.

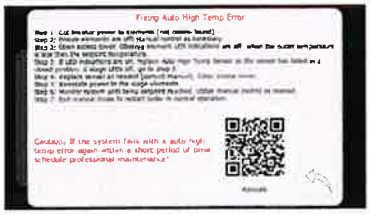

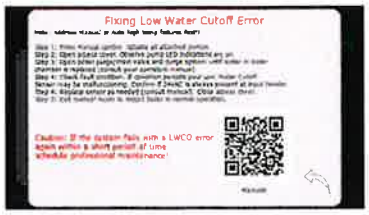

Status Page

1. During normal operation this page provides additional visibility to the current state of the system including active pumps/valves, active thermostat heat calls, output indications, power company load management presence, and flow switch (if configuration available). Unused features are grayed out and respective board inputs are shorted to ensure the system operates properly. The system component is active when a white/red indication is visible.

2. In Manual Mode (consult Boiler Configuration section) the Status Page's zone pumps, gas output, and load management output can be pressed. Pressing the icons activates/deactivates the respective function. To turn off Manual Mode and secure the system from unauthorized configuration press 'Lock System'.

⚠ CAUTION

Manual Operation of the boiler pumps/valves or other outputs is only authorized by Factory Trained personnel. Uncontrolled heating and subsequent activation of built-in safety features may occur. Unauthorized system command, modifications or bypass of any controls, or installation practices not according to the details of this manual will void the product warranty, the ETL/Intertek/UL certification, and manufacturer product liability. Electro Industries, Inc., cannot be held responsible for field modifications, incorrect installations, and conditions which may bypass or compromise the built-in safety features and controls.

Setup Page

1. This page provides the ability to adjust the configuration of the system including zone, temperature, boiler, and pump settings. When the buttons are opaque, the system cannot be modified. To adjust the configuration of the system, follow the steps as indicated in the 'Boiler Configuration' section, 'Technician Mode'.

2. Once enabled the four sections that can be modified are Zone Setup, Temp Setup, Slave Boiler, and Pump Setup. Detailed instructions on setup are found in the following 'Boiler Configuration' 'Setup Page' section of this manual.

Diagnostics Page

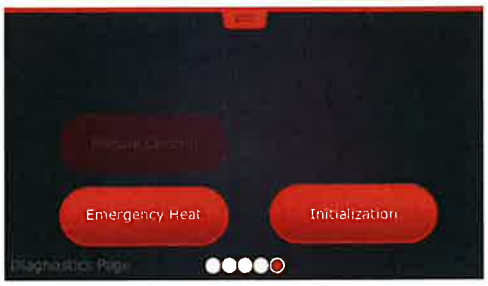

1. Normal operation allows access to 'Initialization' and 'Emergency Heat'. Configuration of systems settings are accessible only after entering the proper configuration password. The options are by default disabled and opaque as indicated on the right.

2. Once enabled the one additional section, 'Manual Control' can be accessed on the 'Diagnostics Page'. Detailed instructions on setup are found in the following 'Boiler Configuration' 'Setup Page' section of this manual.

⚠ CAUTION

Manual Operation of the boiler pumps/valves or other outputs is only authorized by Factory Trained personnel. Uncontrolled heating and subsequent activation of built-in safety features may occur. Unauthorized system command, modifications or bypass of any controls, or installation practices not according to the details of this manual will void the product warranty, the ETL/Intertek/UL certification, and manufacturer product liability. Electro Industries, Inc., cannot be held responsible for field modifications, incorrect installations, and conditions which may bypass or compromise the built-in safety features and controls.

BOILER CONFIGURATION

Overview

1. Boiler configuration is completed primarily in the Setup and Diagnostic Pages. Entering system configuration mode is behind password protection to prevent unintended system modification. To enable system modification, follow the steps found in the 'Technician Mode' section of this manual in the 'Initialization' button on the 'Diagnostics Page'

Home Page

1. This page provides the ability to change the visible language of the interface between English, French and Spanish. Pressing on the selected flag brings up the three available options. While the menu is expanded select the desired system language. Once selected all the text will be translated into the respective language. Functionality does not change between languages. Swipe right to move to the next page.

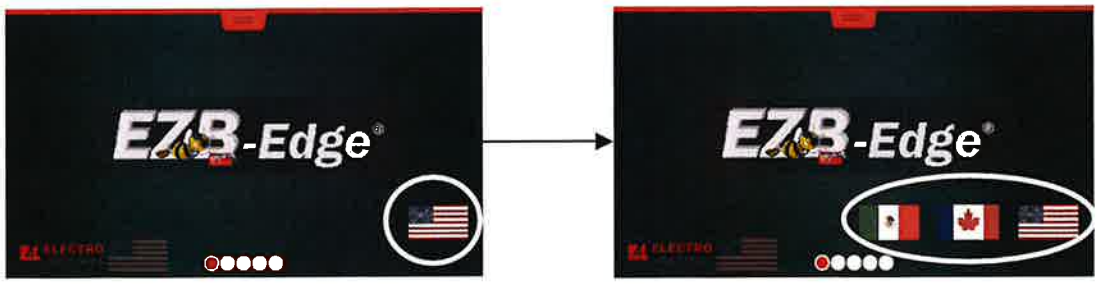

Main Page

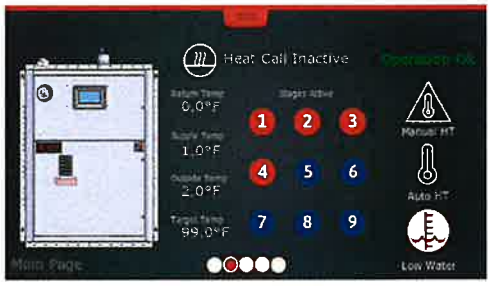

1. The only configuration this page provides is during Manual Mode operation (Consult 'Technician Mode' and 'Manual Mode' Sections of this manual).

2. In Manual Mode (Consult 'Technician Mode' and 'Manual Mode' Sections of this manual) the Main Page's boiler element and error indications can be pressed. Pressing the boiler element indications commands the respective element to turn on or off. To turn off Manual Mode and secure the system from unauthorized configuration swipe one page to the right and press 'Lock Screen'.

⚠ CAUTION

Manual Operation of the boiler elements is only authorized by Factory Trained personnel. Uncontrolled heating and subsequent activation of built-in safety features may occur. Unauthorized system command, modifications or bypass of any controls, or installation practices not according to the details of this manual will void the product warranty, the ETL/Intertek/UL certification, and manufacturer product liability. Electro Industries, Inc., cannot be held responsible for field modifications, incorrect installations, and conditions which may bypass or compromise the built-in safety features and controls.

Status Page

1. This page provides additional visibility to the current state of the system including active pumps/valves, active thermostat heat calls, output indications, power company load management presence, and flow switch (if configuration available). Unused features are grayed out. The system component is active when a white/red indication is visible.

2. In Manual Mode (Consult 'Technician Mode' and 'Manual Mode' Sections of this manual) the Status Page's zone pumps, gas output, and load management output can be pressed. Pressing the icons activates/deactivates the respective function. To turn off Manual Mode and secure the system from unauthorized configuration press 'Lock Screen'.

⚠ CAUTION

Manual Operation of the boiler pumps/valves or other outputs is only authorized by Factory Trained personnel. Uncontrolled heating and subsequent activation of built-in safety features may occur. Unauthorized system command, modifications or bypass of any controls, or installation practices not according to the details of this manual will void the product warranty, the ETL/Intertek/UL certification, and manufacturer product liability. Electro Industries, Inc., cannot be held responsible for field modifications, incorrect installations, and conditions which may bypass or compromise the built-in safety features and controls.

Setup Page

1. This page provides the ability to adjust the configuration of the system including zone, temperature, boiler, and pump settings. When the buttons are opaque, the system cannot be modified. To adjust the configuration of the system, follow the steps as indicated in the 'Technician Mode' and section of this manual.

2. In Technician Mode the four buttons are enabled and the respective sections can be modified: Zone Setup, Temp Setup, Slave Boiler, and Pump Setup. Detailed instructions on setup are found below.

1. **Zone Setup:** Configuration of the different zones are accessed through the 'Zone Setup' button as indicated on the right. Configuration options include zone temperature setpoints, high temp priority enable/disable and zone call priority levels.

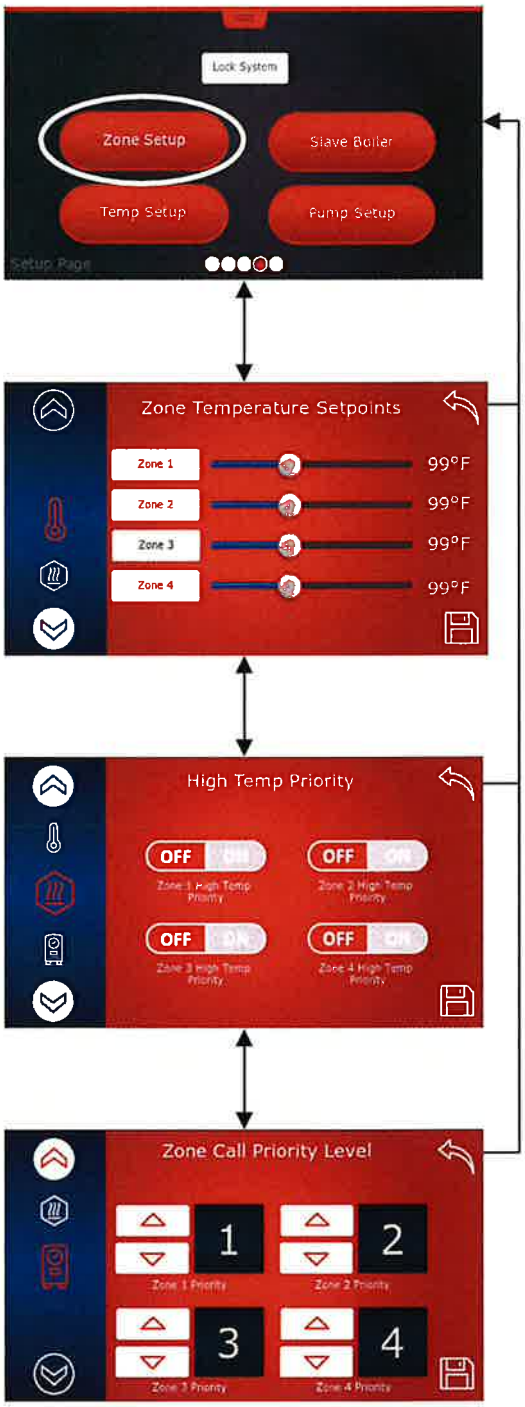

2. Zone temperature setpoints range between 50°F - 180°F and are set by pressing, holding and sliding the respective zone slider to the proper temperature. In order to save the configuration, press the 'Save' button in the lower right-hand corner of the screen. This saves the configuration to non-volatile memory in the screen and sends the configuration to the main controller.

3. High temp priority, when enabled, will disallow any other heat call from activating the corresponding pump. Use this functionality to prevent supply of excess heat to thermally comprisable zones. If multiple high temp priorities are active, only the highest zone setpoint of the high temp priorities will be activated at a time until no heat calls remain.

4. Zone call priority level can be used to change which zone temperature setpoint will be the system commanded water supply temperature. The highest zone priority temperature based on active heat calls gets serviced first until no heat calls remain. If a higher supply temperature exists for a heat call the PID control algorithm automatically disables the element outputs until the proper temperature is obtained.

1. **Temp Setup:** Configuration of temperature settings are accessed through the 'Temp Setup' button as indicated on the right. Configuration options include temperature units, warm weather settings, and temperature offsets.

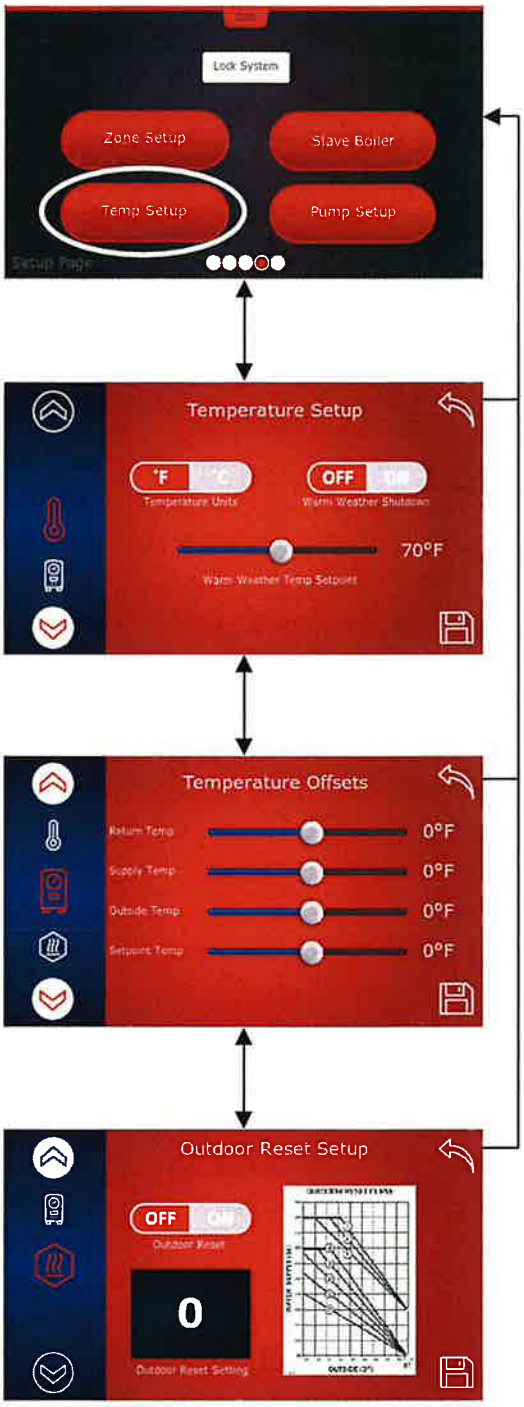

2. Temperature setup enables selecting temperature units (°F or °C), warm weather shutdown enable/disable and the temperature at which to enable warm weather shutdown. When warm weather shutdown is enabled, the system will prevent elements from turning on when the outside temperature is above the setpoint. If outdoor sensor is not used, warm weather shutdown must be set to "OFF".

3. Temperature Offsets enables adjusting the temperature values in the control system above or below the system sensed values. This functionality primarily is used for hot weather/summer testing of the system.
****IMPORTANT*** Unless testing is required it is recommended to leave these values unchanged at the zero degree offset default settings.

Outdoor Reset Setup enables adjusting the output temperature values in the control system respective to the outdoor reset setting curve and the outdoor temperature. This functionality enables the system to adjust the output without user intervention and maintain optimal comfort at the highest efficiency. This option must be set to off when not using the outdoor temp sensor.

1. **Slave Boiler Setup:** Configuration of primary, external and gas boiler settings are accessed through the 'Slave Boiler' button as indicated on the right. Configuration options include boiler runtime, enabling/disabling of boilers, and gas boiler master setup.

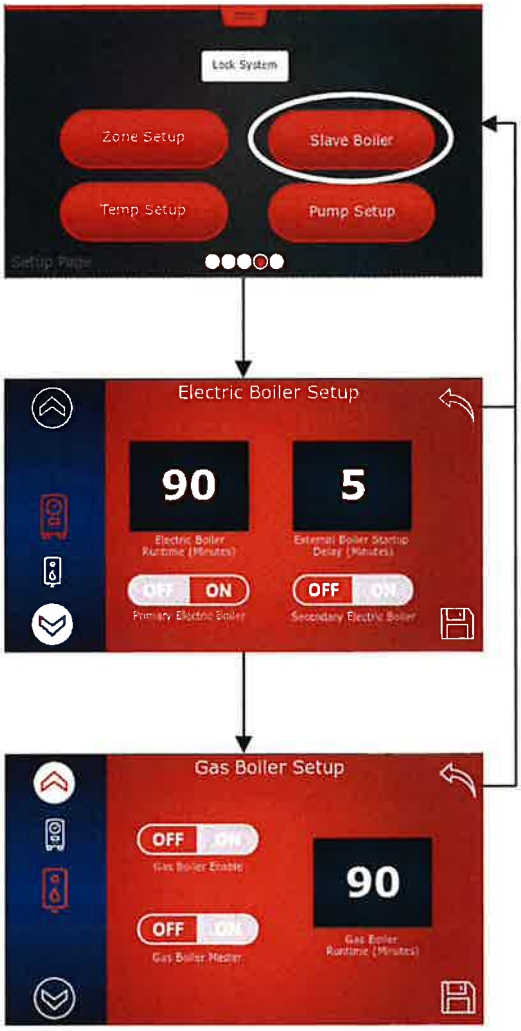

2. Electric Boiler Setup provides the functionality to control available electric boilers. To add a secondary electric boiler in parallel with the primary EZB-Edge boiler toggle the 'Secondary Electric Boiler' to the ON position. After the primary/master EZB-Edge reaches max heat application for the defined external boiler startup delay (minutes), the external boiler will be commanded ON through the 'EXT BOILER' header on the control board with the Accessory: *Electro External Boiler Control Module EB-C-STG5.*

3. Gas Boiler Setup provides the functionality to control connected gas boilers. To connect boiler in conjunction with the primary EZB-Edge boiler toggle the 'Gas Boiler Enable' to the ON position. The gas boiler turns on either after runtime timeout of the primary and external boilers or input from a Power Company load management signal commanding loads to be controlled or managed off their peak load.

4. Gas Boiler Setup also provides the ability to run the gas boiler in master mode, or where for a heat call from the thermostat, the gas boiler is enabled first. To enable this functionality, toggle the 'Gas Boiler Master' button on the control board to the ON position.

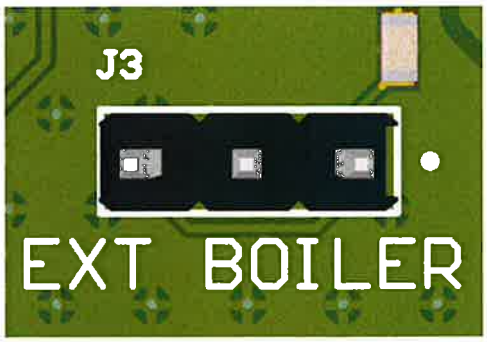

1. **Pump Setup:** Configuration of pump purge and exercise configurations are accessed through the 'Pump Setup' button as indicated on the right. Configuration options include pump pre-purge, post-purge and pump exercise settings for the respective zone pumps/valves.

2. Pre Purge Setup provides functionality to control how long the respective zone pump/valve is engaged or opened prior to elements engaging. The default time is set at 5 seconds for each zone. To change the time, swipe up or down on the respective blue zone square area.

3. Post Purge Setup provides functionality to control how long the respective zone pump/valve is engaged or opened after a heat call is disabled and elements are off. The default time is set at 20 seconds for each zone to cycle remaining hot water through the zone. To change the time, swipe up or down on the respective blue zone square area.

4. Pump Exercise Setup provides functionality to activate pumps or valves periodically to prevent pump vane or valve lockup. When enabled and the pumps or valves have not been activated in over 24 hours, the system will activate the respective zone pumps or valves for the defined post purge time setup in the screen above. To change the pump exercise time, swipe up or down on the respective blue zone square area in the 'Post Purge Setup' screen.

Diagnostics Page

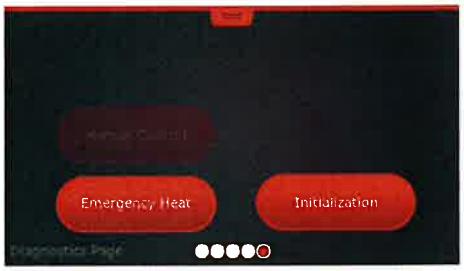

1. **Initialization:** Configuration of systems settings are accessible only after entering the proper configuration password. The options are by default disabled and opaque as indicated on the right. See below to enable configuration settings.

⚠ CAUTION

Manual Operation of the boiler pumps/valves or other outputs is only authorized by Factory Trained personnel. Uncontrolled heating and subsequent activation of built-in safety features may occur. Unauthorized system command, modifications or bypass of any controls, or installation practices not according to the details of this manual will void the product warranty, the ETL/Intertek/UL certification, and manufacturer product liability. Electro Industries, Inc., cannot be held responsible for field modifications, incorrect installations, and conditions which may bypass or compromise the built-in safety features and controls.

Technician Mode

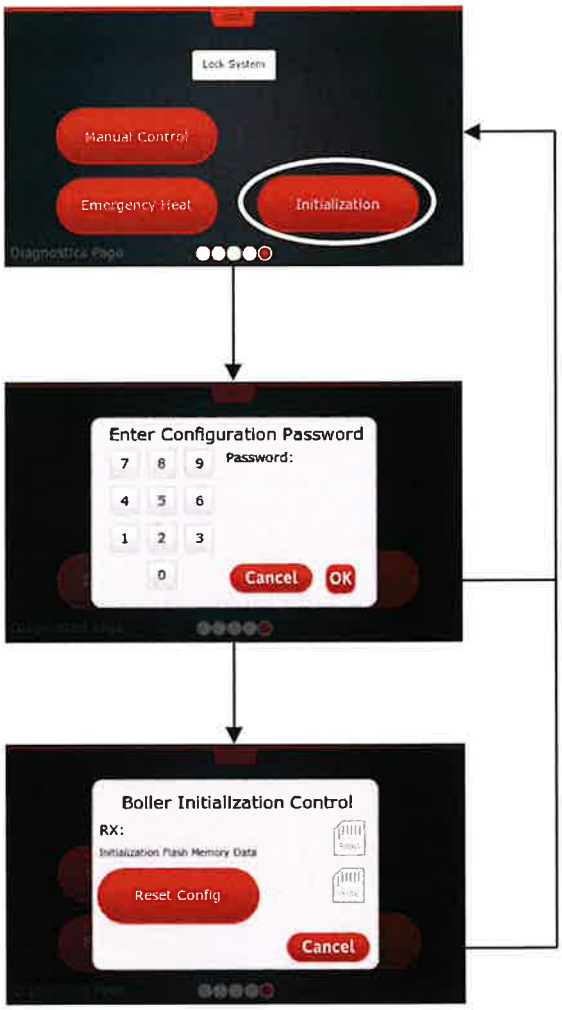

1. Technician Mode: To access and enable the initialization/configuration of the EZB-Edge system first press on the 'Initialization' button. Then enter the password **'11974'** and press OK. This password will unlock the grayed-out buttons for Zone Setup, Temp Setup, Slave Boiler, Pump Setup, and Manual Control. Make necessary changes and then press the 'Lock System' in order to prevent unintended system modifications.

2. Technician system reset and configuration is enabled through a **different factory provided password**. If the need arises for a full factory reset, please contact your dedicated service personnel or Electro Industries, Inc. This system reset enables the boiler to be setup into alternate configurations of Boiler Model, Control Type, Power, and kW rating.

3. Utilizing the factory 'Reset Config' option is only authorized by Technician support or with Electro Industries, Inc. support. The read button will read from non-volatile storage the current boiler configuration. Contact Electro Industries numeric code information displayed on the RX: line. The write button will re-write the current configuration to non-volatile storage. This configuration will be re-accessed in the event of power outages to return the boiler to the previously configured operation.

⚠ CAUTION

Factory Reset of your boiler is only authorized by Factory Trained personnel. Unauthorized factory reset not according to the details of this manual will void the product warranty, the ETL/Intertek/UL certification, and manufacturer product liability. Electro Industries, Inc., cannot be held responsible for conditions which may bypass or compromise the built-in safety features and controls.

Manual Mode

1. Manual Control: Configuration of systems settings are accessible only after entering the proper configuration password (see Technician Mode above). The options are by default disabled and opaque as indicated on the right.

2. Once in 'Technician Mode' the 'Manual Control' button is enabled. To enable manual system control, press the 'Manual Control' button and toggle the button from OFF to ON. This gives direct toggling control over the system outputs (the Main Page's boiler element and error indications and the Status Page's zone pumps, gas output, and load management output can be pressed).

3. Manual operation from the touchscreen interface activates the respective outputs on the control board.

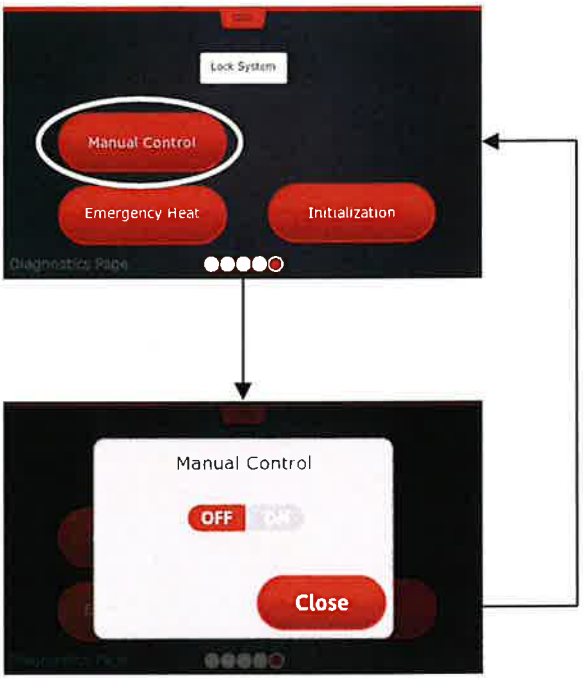

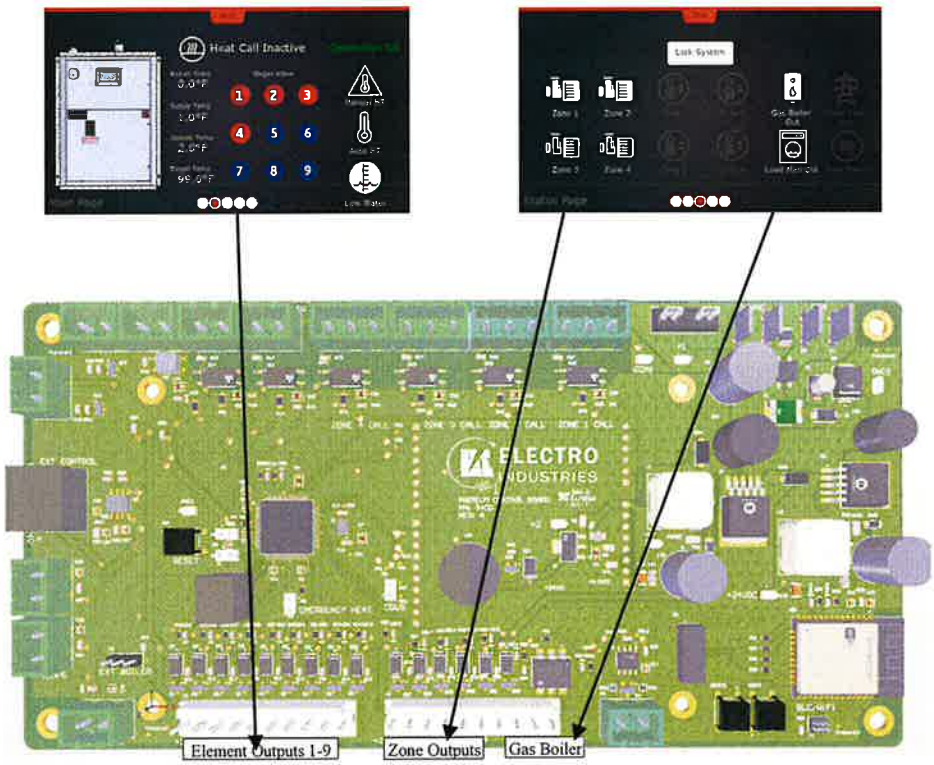

⚠ CAUTION

Manual Operation of the boiler pumps/valves or other outputs is only authorized by Factory Trained personnel. Uncontrolled heating and subsequent activation of built-in safety features may occur. Unauthorized system command, modifications or bypass of any controls, or installation practices not according to the details of this manual will void the product warranty, the ETL/Intertek/UL certification, and manufacturer product liability. Electro Industries, Inc., cannot be held responsible for field modifications, incorrect installations, and conditions which may bypass or compromise the built-in safety features and controls.

Emergency Heat

1. **Emergency Heat:** Configuration of emergency heat is always enabled. This function provides the ability for the boiler to command full element output regulated at 180°F water temperature. Enabling this function by toggling the button to 'ON' turns on all elements and enables all pumps/valve and retains normal zone thermostat heat calls. I.e. maximum boiler heat is commanded to all available zones on active heat calls. Enabling this function does not prevent the safety interlocks from functioning.

   This is a useful feature to test the operation of the boiler. The technician can then utilize an amp meter to test all heating elements for proper ampacity based on boiler kW rating.

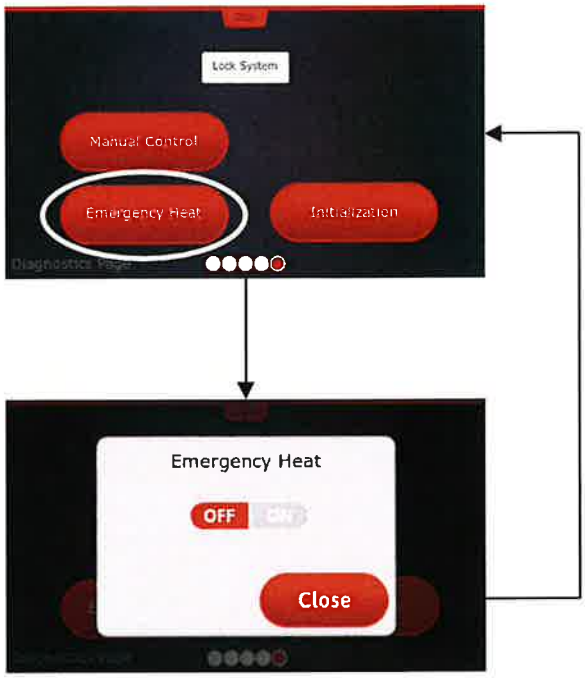

2. Another way to enable emergency (maximum) heat control while retaining zone thermostat inputs is to set each Zone Temperature Setpoint to the maximum value (180°F or 82°C). If the screen is not operating properly, additional functionality can also be enabled by putting a jumper pin on P7 (EMERGENCY HEAT) found on the control board inside the upper cover. This commands the control board directly to maximum water temperature and turns on all pumps **regardless** of thermostat heat call. Enabling this function does not prevent the safety interlocks from functioning. **Use under direct supervision only.**

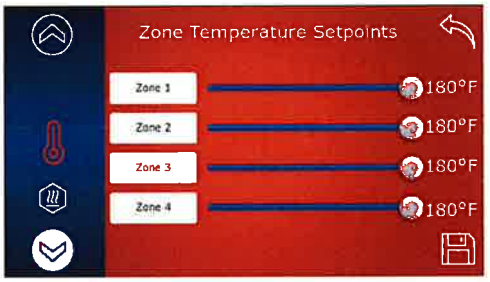

⚠ CAUTION

Emergency Heat of the system via the control board function will output uncontrolled heating to the maximum temperature without any thermostat activation. While Emergency Heat does not bypass the built-in safety features and controls, it increases the possibility of subsequent activation of built-in safety features. Electro Industries, Inc., cannot be held responsible for conditions which result as a byproduct of activating this feature.

INSTALLATION INFORMATION

When using the EZB-Edges' integrated zone controller in priority mode, the boiler system automatically commands the outlet temperature with the associated zone calling to the initialized temperature setpoint in order of priority precedence (1 = highest priority, 4 = lowest priority). This is setup for the commanded zone temperatures and priority is completed through the touch screen interface. See appropriate 'Zone Setup' sub-section found under the 'Boiler Configuration' section.

OUTDOOR RESET OPTION

The EZB-Edge boiler comes equipped with an outdoor sensor (shipped loose). This sensor should be connected to the board at the indicated spot to allow for outdoor reset function. If the outdoor sensor is not connected, the system outdoor reset will be unable to properly function and errant outside temperature readings will be indicated on the touchscreen interface.

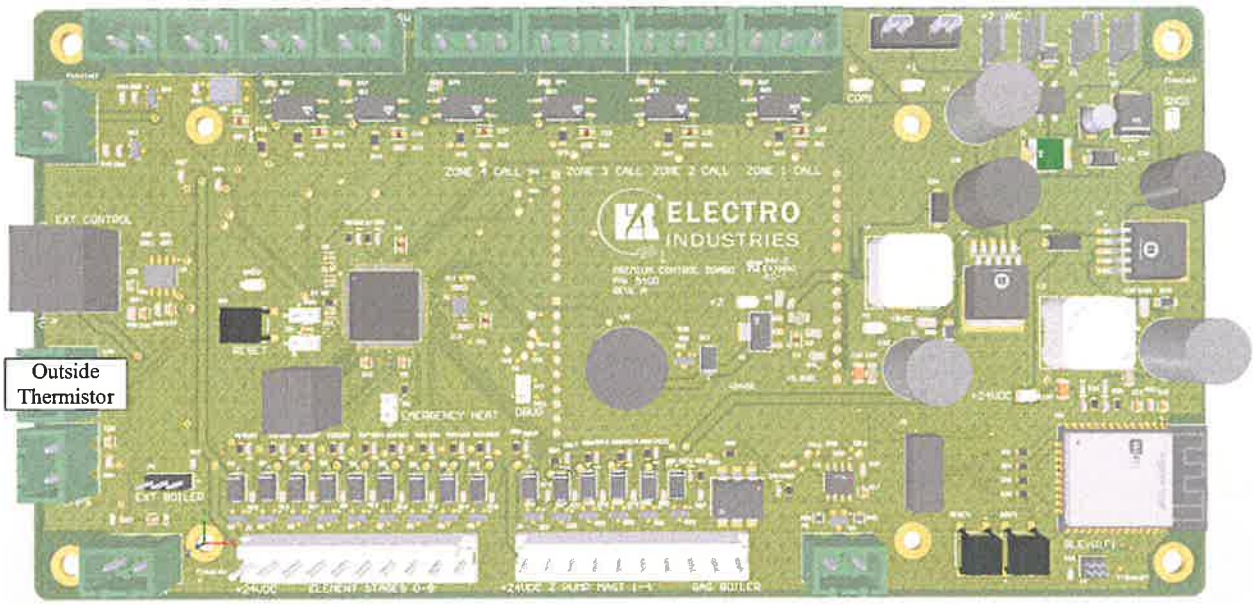

What is Outdoor Reset?

Outdoor reset is where the Electro-Boiler Target Water Temperature shifts up and down based on the outdoor temperature. The water temperature coming out of the boiler will be higher when it's cold outside and lower when it's warmer outside. This concept is used to have the boiler work with the building heat loss to maintain a more even BTU delivery to the space. This helps with overall system efficiency as well.

Outdoor Reset Activation

If it is determined that outdoor reset is required for this application, it needs to be activated through the touchscreen interface.

Follow this sequence to activate outdoor reset:

Step 1: Power down the Electro-Boiler
Step 2: Connect the outdoor sensor to the Outside Thermistor header (shown above)

- Wire placement to pin does not affect thermistor operation.

Step 3: Power up the Electro-Boiler and Touchscreen interface.
Step 4: Enable 'Technician Mode' (See appropriate section of this manual)
Step 5: Activate Outdoor Reset Setup and select the appropriate reset setting for your application (refer the 'Boiler Configuration' section under 'Setup Page' → 'Temp Setup' for instructions. More detailed outdoor reset settings information can be found below).

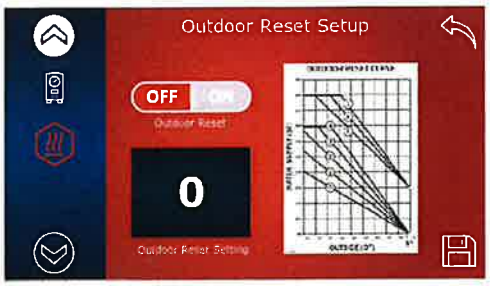

OUTDOOR RESET SETUP

Non-Outdoor Reset – simply set the desired zone setpoint temperature under the 'Zone Setup' → 'Zone Temperature Setpoint' page.

This control strategy is accomplished via the touchscreen interface. Press the 'Save' button for the settings to take effect.

Outdoor Reset – the temperature decal will relate to the OT 0° F set point and the screen 'Outdoor Reset Setting' number (0-7) knob numbers coincide with the curves below. Settings 0-4 correlate to High Mass and 5-7 correlate to Low Mass. Low Mass relates to the ramp-up water temperature starting point, as shown.

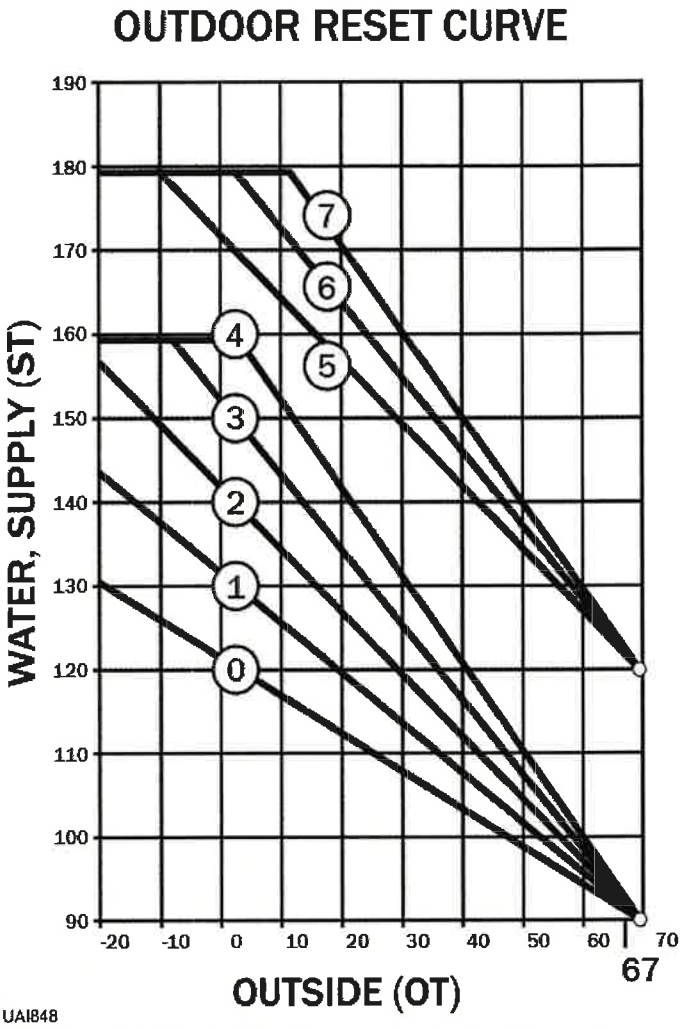

Comment: The touchscreen interface 'Outdoor Reset Setting' selection number coincides to the curves above. This temperature value shown in the above reset curve is actually the supply water at 0° F outside and adjusted by the system automatically based on the outside temperature.

OPERATIONAL INFORMATION

Touchscreen Status Indications

- **190°F AUTO RESET LIMIT**, red – this will **only** illuminate when the vessel high limit opens due to excessive water temperature. This hi-limit is self-resetting.

- **205°F MANUAL RESET HIGH LIMIT**, red – this will **only** illuminate when the vessel manual high limit opens due to excessive water temperature. This hi-limit is manually reset (see Manual Reset Hi-Limit Section.

- **LOW WATER CUTOFF SWITCH**, red – this will **only** illuminate when the vessel is equipped with this function and the sensor opens when low water is sensed. This limit is self-resetting.

- **BOILER NORMAL OPERATION,** green (Operation Ok) upper right of 'Main Page' – this is illuminated at all times when the boiler is operating without an error. It represents 24-volt power source, good fuse, controller logic is operational, and expected sensor inputs. If the system is malfunctioning; this monitor indication will turn red (Operation Error!), see Troubleshooting section.
- **FLOW SWITCH,** red – when equipped and illuminated the systems flow switch is **active**. This enables the heater elements from coming on as a software safety interlock.

- **GAS BOILER,** red – when enabled and illuminated the Gas Boiler output is commanded to activate a parallel connected Gas Boiler.

- **ELECTRIC MODE**, red – when illuminated the system is in the electric mode. If it is not illuminated the utility load control receiver is in the interrupt or on-peak mode. If there is an optional or remote standby switch, the status of the standby switch is also monitored by this indication.

- **THERMOSTAT CALL**, red – indicates a remote switch closure (thermostat or zoning end switch) is closed between terminals R and W. Left image is 'Main Page' indication, right image is 'Status Page' indication.

- **PUMP/VALVE OUTPUT,** red – indicates the respective zone pump or valve is currently active. Pumps are activated by heat calls, manual operation, and pump exercise functions.

Normal Heating Operation

When there is a heat call from the thermostat (24VAC present on the control board W-C terminals) the boiler pump will start and thermostat call indication will illuminate on the front of the EZB-Edge touchscreen interface:

- Boiler Operation (Main Page), steady green
- Electric Mode (Status Page), steady red
- Thermostat Call (Main Page and Status Page), steady red
- Error Indications (Main Page), steady gray/white
- Temperature Indications (Main Page), white/updating
- Pump Output (Status Page), steady red (respective zone heat call)

After a defined and configurable pump pre-purge delay the EZB-Edge will begin to turn on elements (as indicated by the four red indications on the touchscreen interface 'Main Page' (and on the inside control board) in order to match the supply water temperature to the target temperature. The target water temperature is set in the 'Zone Temperature Setpoints' or is determined using the outdoor reset curve when the outdoor sensor is connected and enabled in the 'Outdoor Reset Setup'.

As the EZB-Edge reaches it set point water temperature you may see the boiler stage lights stage off. Stage 1 will pulse on and off as the system modulates and the EZB-Edge precisely controls output water temperature with the built-in WarmFlo PID control algorithm utilizing zones calls, priorities and setpoints, high temp priorities, supply, return and outdoor temperatures. This is normal operation for the built-in WarmFlo controller as it works to maintain constant water temperature as efficiently as possible.

Note: Some model sizes will not require all four stages to control elements. The factory set model determines the number of elements used and indicated on the screen.

190° auto reset high limit – under normal operating conditions the 190° auto reset indication should not come on. The built-in WarmFlo control of the EZB-Edge should prevent this. However, on a system with very low water flow or trapped air you may see the 190° auto reset activate to remove power to the element relays. The water within the boiler vessel must cool by 30° F before the auto high limit will self-reset.

If you experience auto reset limit trips at initial startup of the EZB-Edge the following items should be checked:

- System pressure 12 to 20 psi on boiler gauge
- All ball valves and manifold valves are in the "on" position
- Boiler and system are purged of any trapped air. Loosen air bleed cap on the top of the air eliminator.
- Check GPM of water flow through the system and compare to minimum GPM flow rate of selected model.

Boiler water temperature – with a thermostat heat call, the EZB-Edge control to a temperature set point. The time it takes to reach set point will vary depending on conditions of the system. When operating at the recommended flow rate (GPM per kW) you should see an approximate 20° difference between return water and supply water temperature. This is commonly referred to as ΔT. On a cold start up, such as a high mass radiant floor heating application, with return water temps below 60° F, it could take a several hours for the boiler to reach a set point above 80° F. Adjusting the set point dial to a higher temperature during a cold startup will have little or no effect since the boiler cannot exceed a 20° increase in temperature from return to discharge.

Once the return water temperature starts to increase you will start to see an increase in outlet temperature. This will continue until the outlet temperature reaches the desired set point, at which point the WarmFlo control will stage and modulate elements to hold that temperature.

ERROR DIAGNOSTICS

Touchscreen Interface Error Lights

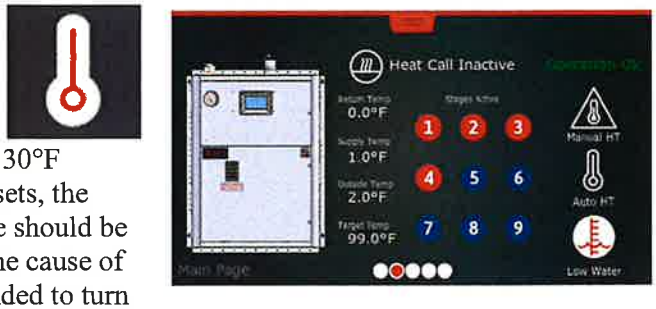

- **190°F AUTO RESET LIMIT**, red – this will **only** illuminate when the vessel high limit opens due to excessive high water temperature. This hi-limit is self-resetting, but requires the water temperature to cool by 30°F (~160°F) prior to resetting. Once the error resets, the system will resume normal operation. Service should be completed as soon as possible to determine the cause of the auto reset limit activation. It is recommended to turn the system off until service can be provided following this error.

- **205°F MANUAL RESET HIGH LIMIT**, red – this will **only** illuminate when the vessel manual high limit opens due to excessive high water temperature. This high limit is manually reset (see Manual Reset Hi-Limit Section). Service is required as soon as possible following this error.
- **LOW WATER CUTOFF SWITCH**, red – this will **only** illuminate when the vessel is equipped with this function and the sensor opens due to low water sensed. This limit is self-resetting.
- **BOILER NORMAL OPERATION,** green (Operation Ok) upper right of 'Main Page' – this is illuminated at all times when the boiler is operating without an error. It represents 24-volt power source, good fuse, controller logic is operational, and expected sensor inputs. If the system malfunctioning; this monitor indication will be red (Operation Error!).

- **FLOW SWITCH,** red – when equipped and illuminated the systems flow switch is **active**. This allows the heater elements from coming on as a software safety interlock.

⚠ WARNING

IF AN ERROR OCCURS SCHEDULE PROFESSIONAL MAINTENANCE TO DETERMINE THE CAUSE OF THE ERROR. FAILURE TO DO SO AND OPERATING THE SYSTEM GREATLY INCREASES THE CHANCES OF DEVICE FAILURE AND WILL VOID ANY PRODUCT WARRANTIES.

Manual Reset Hi-Limit

⚠ WARNING

DO NOT PROCEED UNTIL POWER IS REMOVED (ALL BREAKERS ARE IN THE OFF POSITION INSIDE THE PRODUCT AND AT YOUR ELECTRICAL PANEL).

At the top of the vessel there will be either two or three surface mount hi-limits preset at 205° F. There is an indicator associated with these safety hi-limits on the touchscreen interface. Also, these 205° F safety limits break connection of the L1 and L2 current carrying 240/208-volt wires going to the elements. Reset involves locating a small shiny lever or metal tab protruding on the side of the black safety limit base. This small tab is pressed inward approximately 1/8" to snap in the contacts. Use insulated tools to snap back in the contacts.

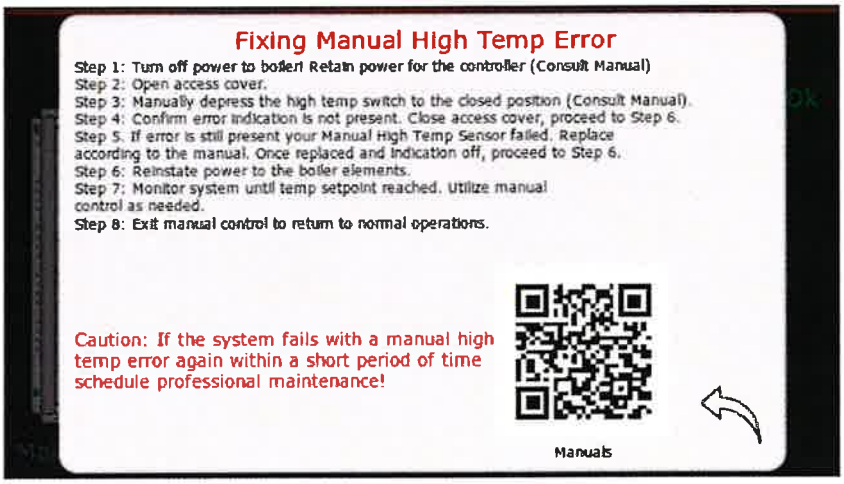

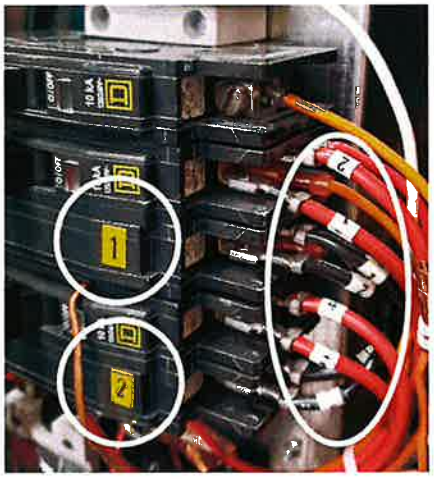

205°F Manual Reset

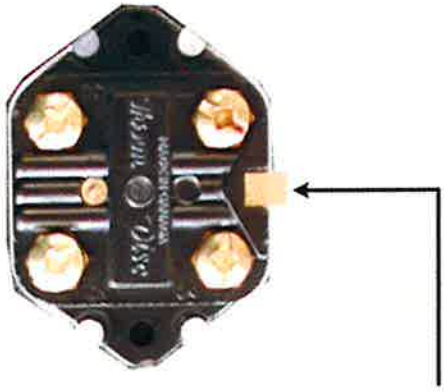

Press this to reset

⚠ WARNING – HIGH VOLTAGE

MUST SHUT OFF HIGH VOLTAGE BEFORE ATTEMPTING TO RESET.

Once the tab is reset, turn on the breakers and evaluate the errors on the screen. A full power reset may be needed to fully clear the errors.

⚠ CAUTION

THE WIRES AND SCREWS HAVE 240/208-VOLT POTENTIAL AND CAN BE DANGEROUS. TURN OFF CIRCUIT BREAKERS BEFORE INVESTIGATING OR ATTEMPTING TO RESET THE 205° F SAFETY LIMITS. PRIOR TO CONDUCTING ANY ERROR CORRECTION ENSURE THAT THE ELEMENTS ARE NOT POWERED WITH A VOLTAGE TEST PROBE OR EQUIVALENT. FAILURE TO DO SO MAY RESULT IN INJURY OR DEATH.

Auto Reset Hi-Limit

⚠ WARNING

DO NOT PROCEED UNTIL POWER IS REMOVED (ALL BREAKERS ARE IN THE OFF POSITION INSIDE THE PRODUCT AND AT YOUR ELECTRICAL PANEL).

At the top of the vessel there will be two red/white or red/yellow wires to an auto hi-limit sensor which trips power to the element relays at 190° F. There is an indicator associated with these safety hi-limits on the touchscreen interface through a single red/white wire to the control board. The auto resetting high limit is in series with the element relays' 24VDC power. Safety interlock activation prevents relay activation of the elements. The auto hi-limit is automatically resetting but requires the water temperature to cool by 30°F (160°F) prior to resetting. Once the error resets, the system will resume normal operation. Service should be completed as soon as possible to determine the cause of the auto reset limit activation. It is recommended to turn the system off until service can be provided following this error.

If the system does not reset by itself the following steps can be attempted.

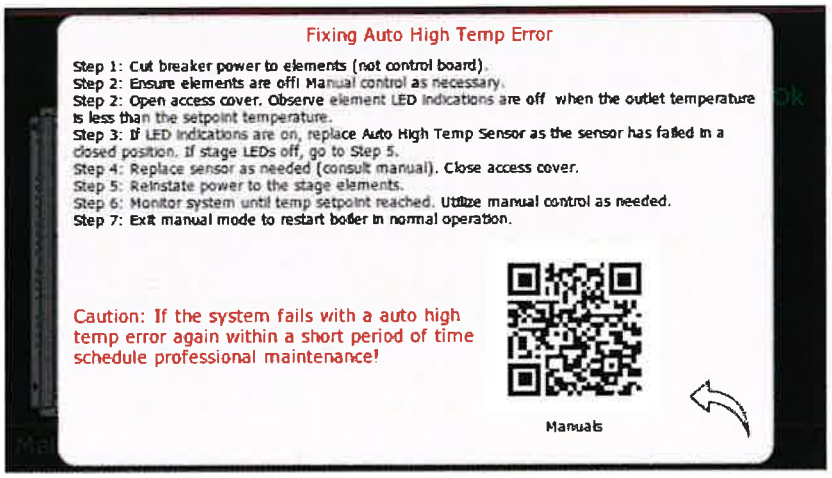

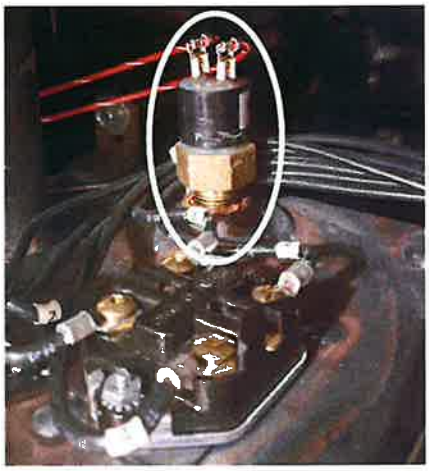

Low Water Cutoff

This function is not provided but can be added to the EZB-Edge. From the factory this switch will be shorted in the indicated position below. If not active, this prevents the heater elements from coming on as a software safety interlock. This sensor automatically resets when proper flow is reintroduced. Once the error resets, the system will resume normal operation. It is recommended to purge the air from the system if this error occurs and cannot be corrected.

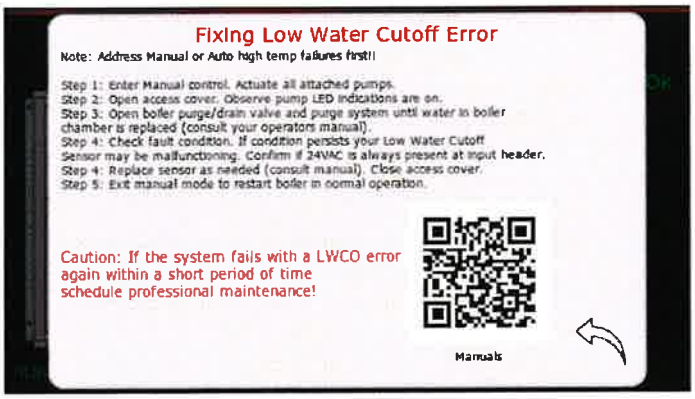

Flow Switch

This function is not provided but can be added to the EZB-Edge. From the factory this switch will be shorted in the indicated position below. If not active, this prevents the heater elements from coming on as a software safety interlock. This sensor automatically resets when proper flow is reintroduced. Once the error resets, the system will resume normal operation. It is recommended to purge the air from the system through manual pump activation if this error occurs and cannot be corrected.

Internal Fuse

The fuse on the controller board protects the transformer secondary, external items connected to R, and the circuit board itself. Replace with 2-amp, fast blow fuse or equivalent.

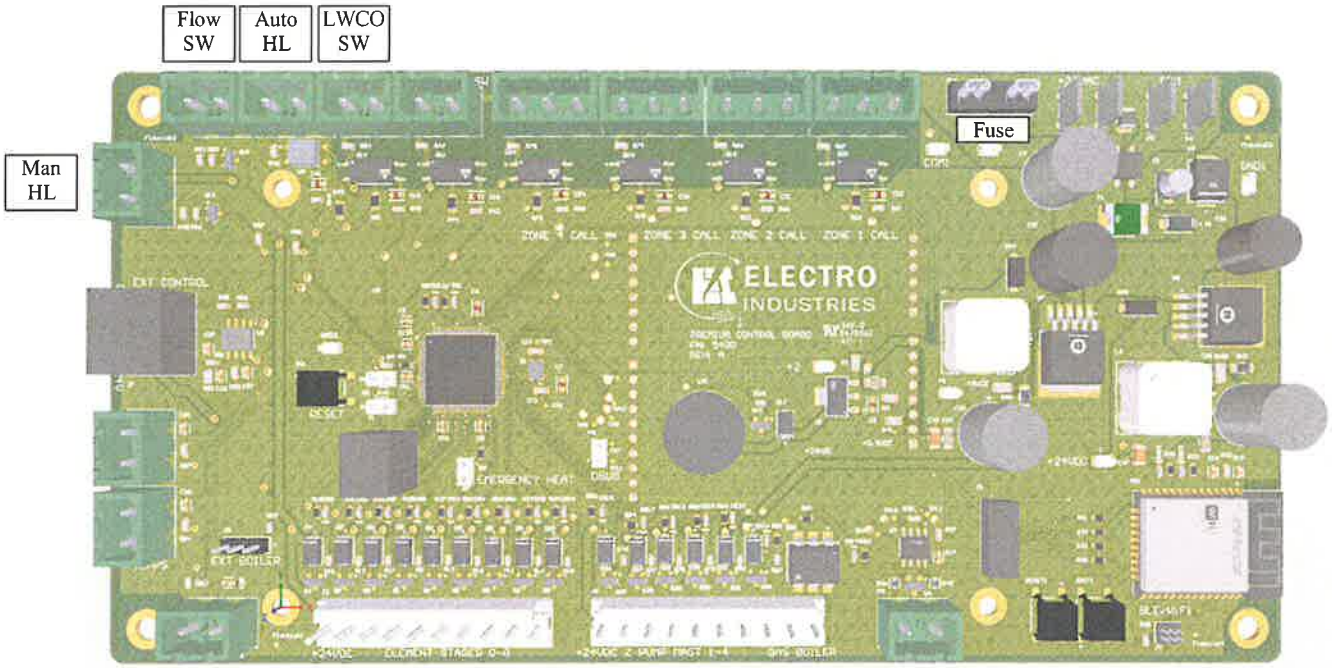

System Pressure

The side press/temperature gauge should be at approximately 12-20 psi at room temperature water and should not rise more than approximately 4 psi at the operating or hot water temperature. If the pressure change is more than approximately 4 psi, trapped air may still exist within the boiler system. There may also be a problem with the expansion tank piping or the expansion tank itself.

System Activation Prevented

Emergency heat should only be considered in emergency situations. Adding a temporary jumper to EMERGENCY HEAT will command the control board to maximum output and water temperature and turn on all pumps **regardless** of thermostat heat call. Enabling this function does not prevent the safety interlocks from functioning but greatly increases the likelihood of the auto reset limit of activating. If emergency heat is activated from the touchscreen, the system will configure temperature set point to the maximum 180°F and the control board will regulate based on heat calls.

⚠ CAUTION

THIS JUMPER SHALL NOT BE A PERMANENT FUNCTION, JUMPER NEEDS TO BE REMOVED AFTER SLAB IS APPROACHING NORMAL TEMPERATURE.TOUCHSCREEN EMERGENCY HEAT SHOULD ONLY BE USED IN EMERGENCY SITUATIONS AND CONTINUOUSLY MONITORED TO PREVENT MANUAL HI-LIMIT ACTIVATION. AUTO HI-LIMIT ERROR BUZZER INDICATION IS CERTAIN BUT WILL NOT PREVENT ELEMENTS COMMANDED ON.

⚠ CAUTION

WATER TEMPERATURES IN EXCESS OF 140° F SHOULD NOT BE INTRODUCED INTO RADIANT FLOOR HEAT SYSTEMS. DAMAGE TO CERTAIN FLOORING MATERIALS MAY OCCUR.

Replacement Parts

WFS5405	Supply or Return temperature sensor (Thermistor), 4 ft.
WFS6206	Outdoor temperature sensor (Thermistor), 25 ft.
EB5400	Control board and touchscreen
UFUSE0443	2-amp, fast blow fuse
4038KIT	Triac switch module
5128C	Heating relay
5123	Relay, 240V manual limit indication relay
5535	Safety hi-limit, manual reset, 205° F
5537G	Safety hi-limit, auto reset, 190° F
5453	Relief valve, 30 PSIG
5456	Pressure/temperature gauge
5652	60A SQ D circuit breaker
5651	45A SQ D circuit breaker
5650	30A SQ D circuit breaker
5680	10A SQ D circuit breaker
EB5526	Electric element, 240V, 5 kW
EB5520	Electric element, 240V, 4.5 kW
EB5524	Electric element, 240V, 2.5 kW
5541	Transformer, 24V, 40VA
5585T	Circulating Pump, 120V
5590	Expansion tank, 2.1 gal.
5596	Air eliminator

TROUBLESHOOTING/REPAIR HELPS

Control Interference

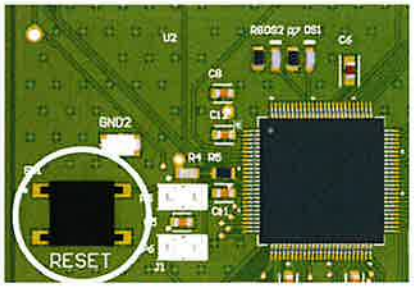

1. This WarmFlo controller contains several interference suppression components, but as an electronic logic product, unpredictable and unusual transients or interference may sometimes cause strange results. If the WarmFlo controller is acting strange, one immediate step would be conducting a power down reset. Simply turn off boiler power or breaker #1, when the touchscreen and control board have no lights, count to 10 and re-energize power supply. Another option is to press the reset button on the control board (this resets the control board but not the screen).

Inoperative Temperature Sensor

1. Inoperative temperature sensor (thermistor), if the control system reads a thermistor value outside of the range -40°C to 150°C on the touchscreen, the thermistor is malfunctioning. Replace thermistor according to the parts list.
2. The outdoor sensor must be sensing the actual outside temperature for this controller to correctly operate (only if you're using the outdoor reset configuration). Do not simply leave the outdoor sensor hang in the room and attempt to run this system with outdoor reset enabled.

Temperature Override

1. Control board bypass – the inside control board, near the processor, the board EMERGENCY HEAT jumper can be used to directly to command the heating stages to max output. **Note**: Verify pump(s) are operating when engaging EMERGENCY HEAT jumper. In other words, when connected, all four stages are hard on until EMERGENCY HEAT is removed (toggled off). Since activating this causes full electric element output subject to mechanical limits, this function should only be used to verify all stages or troubleshoot proper current at each element and under direct supervision only.
2. Emergency Heat from Touchscreen – Activating this function from the touchscreen under 'Emergency Heat' commands the boiler to 180°F based on active heat calls. PID Control functions are still in effect with this jumper connected. In other words, when connected, all four stages are commanded to 180°F only when a heat call is present.

Wiring

1. The terminal blocks for control wire hook-up are designed for a wire insertion and screw clamp down. If there is no wire connected and the screw is loose, the screw may not necessarily make a good electrical contact to the inside components. Example – if you are jumpering the thermostat terminals without thermostat wire connection or if you are attempting to measure voltage on the screw head, you may get erroneous or unpredictable results if the screw is not tightened down.
2. Use general heating system logic information and basic understanding of the terminal block wiring functions measure various voltage points to determine proper operation.

Sensor Temperature Calibration

Temperature sensors are accurate thermistor based and do not require calibration. However, if sensor temperature error is determined, there is a field calibration technique that can be attempted prior to sensor replacement. Proceed with caution.

The sensor (Outside, Supply, Return) can be calibrated with ice water (32°F) and necessary temperature offsets applied in the 'Temp Setup' → 'Temperature Offsets'. Verify against the 'Main Page' indications that the temperature of the corresponding sensor is reading 32°F in ice water. Continue to adjust as necessary.

EZB MECHANICAL PIPING SCHEMATIC

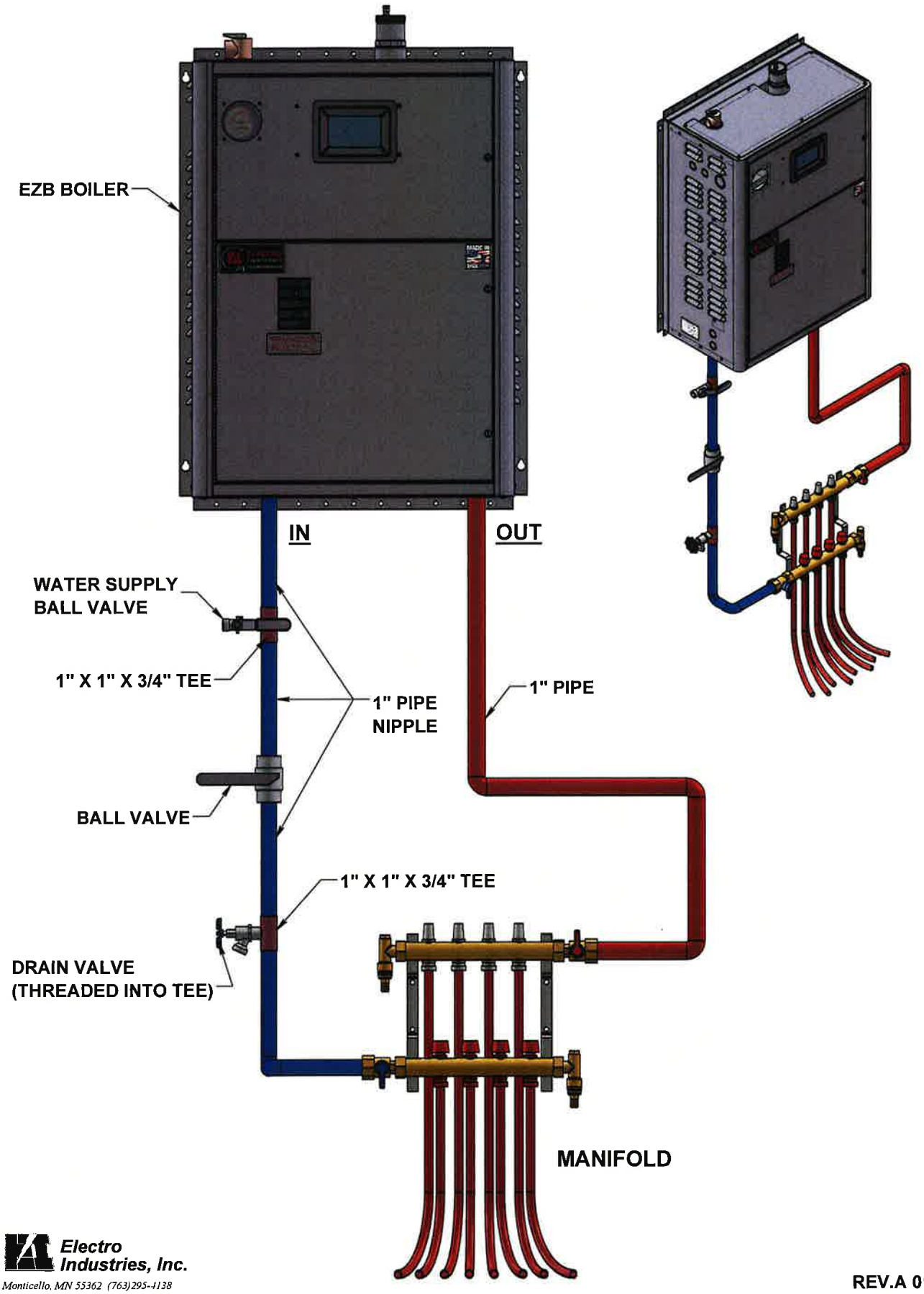

Electro
Industries, Inc.
Monticello, MN 55362 (763)295-4138

BX603
REV.A 01/10/22

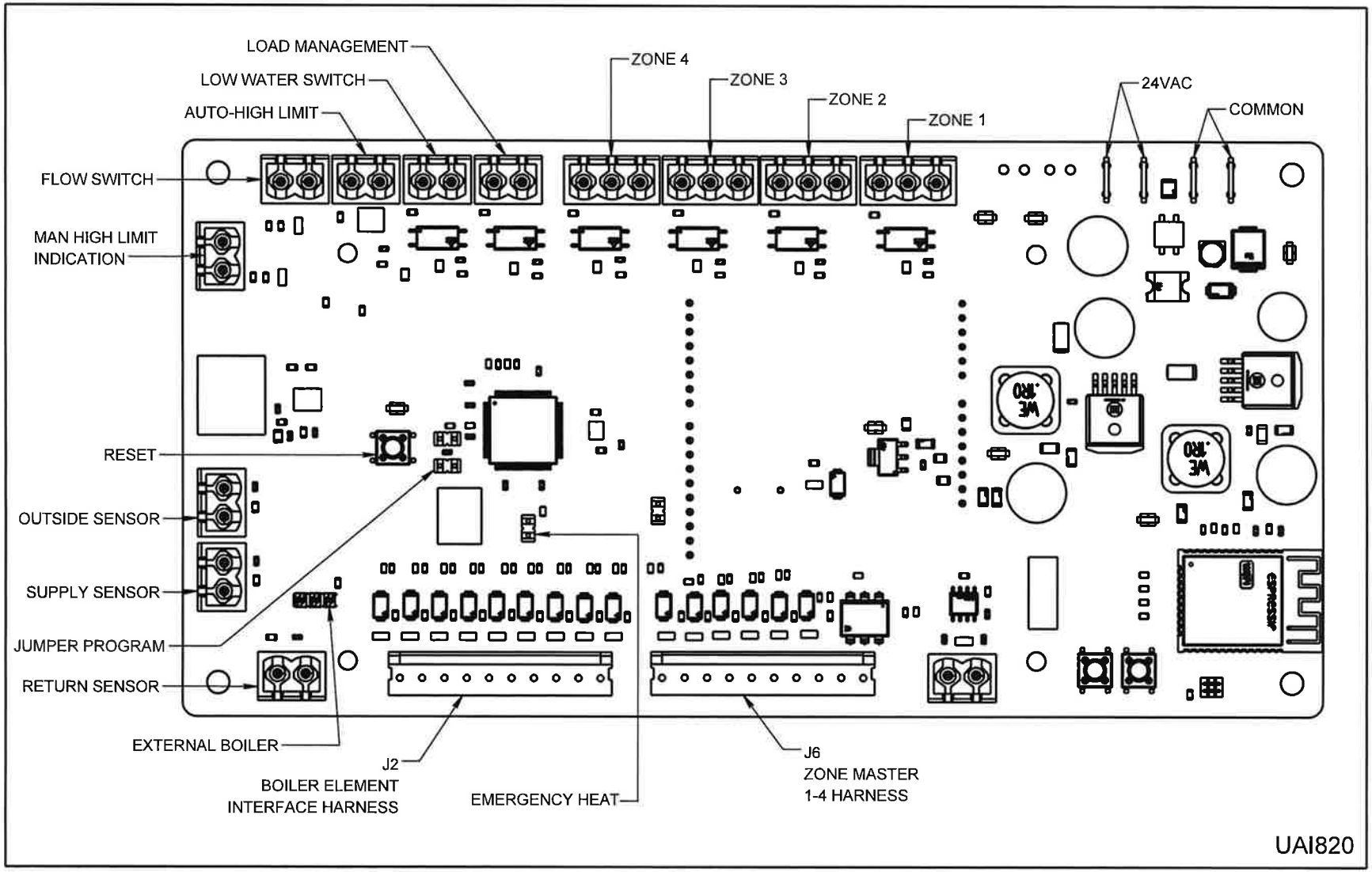
LOAD MANAGEMENT
LOW WATER SWITCH
AUTO-HIGH LIMIT
ZONE 4
ZONE 3
ZONE 2
ZONE 1
24VAC
COMMON
FLOW SWITCH
MAN HIGH LIMIT
INDICATION
RESET
OUTSIDE SENSOR
SUPPLY SENSOR
JUMPER PROGRAM
RETURN SENSOR
EXTERNAL BOILER
J2
BOILER ELEMENT
INTERFACE HARNESS
EMERGENCY HEAT
J6
ZONE MASTER
1-4 HARNESS
UAI820

EZB SERIES HOOKUP, INSTALLATION

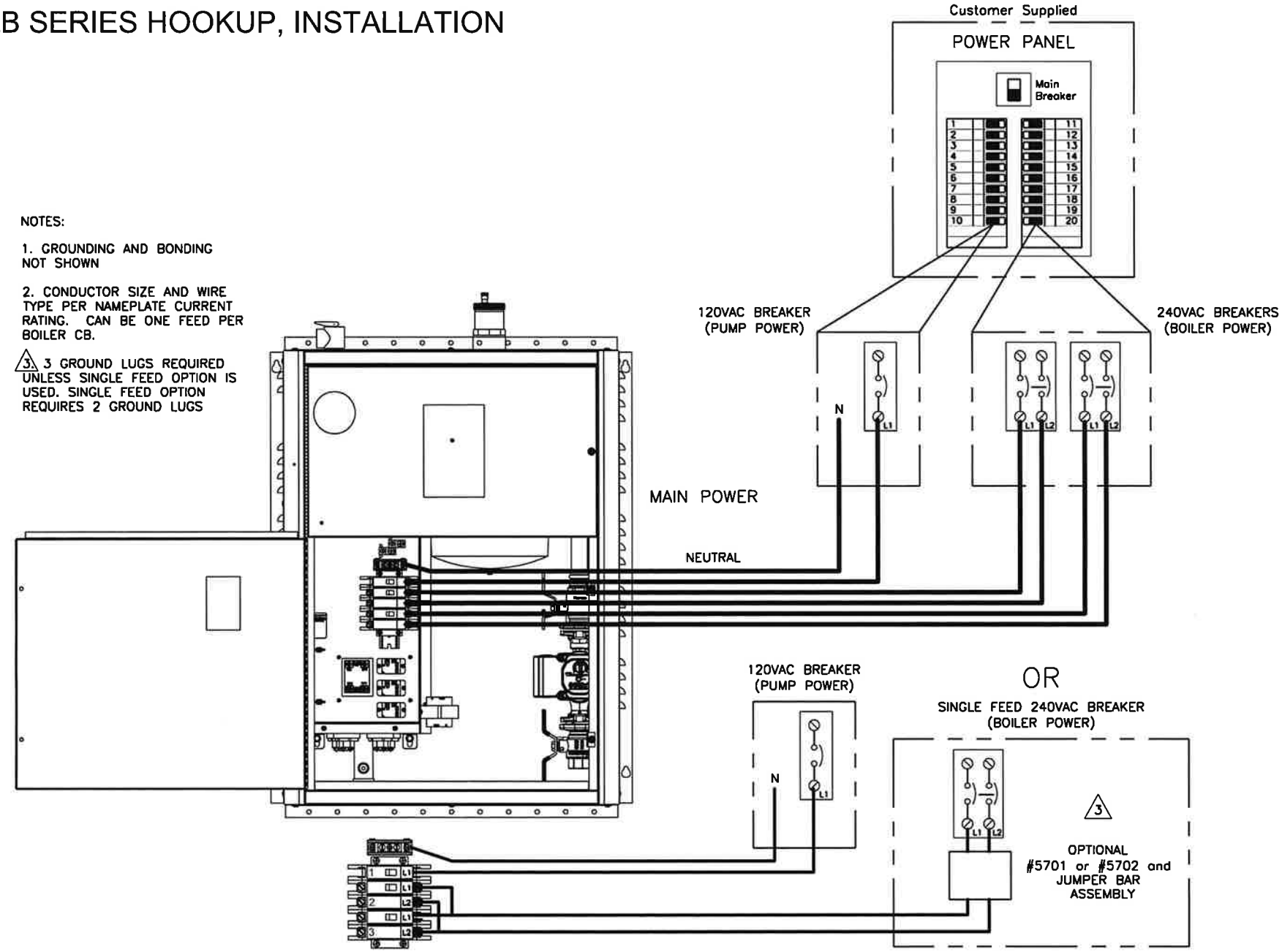

NOTES:

1. GROUNDING AND BONDING NOT SHOWN

2. CONDUCTOR SIZE AND WIRE TYPE PER NAMEPLATE CURRENT RATING. CAN BE ONE FEED PER BOILER CB.

3. 3 GROUND LUGS REQUIRED UNLESS SINGLE FEED OPTION IS USED. SINGLE FEED OPTION REQUIRES 2 GROUND LUGS

ELECTRO INDUSTRIES, INC.
MONTICELLO, MN 55362

BH601
Rev. B 03/15/22

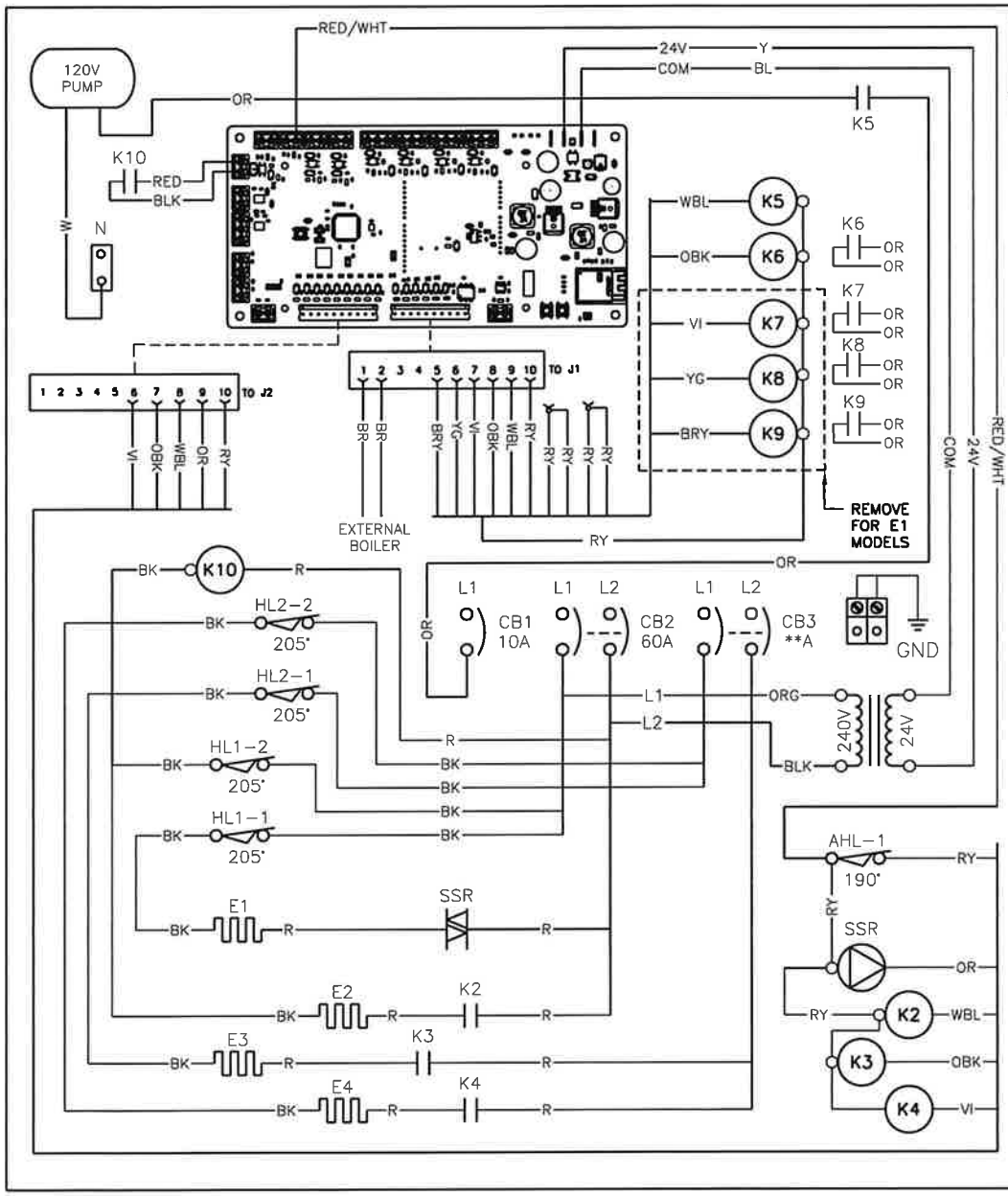

ELECTRO-BOILER
EZB-E4/E1-**

NOTES:
1. 20KW & 17KW AS SHOWN
2. 15KW & 12KW REMOVE E4 & K4
3. 10KW, 7KW & 5KW REMOVE E3, E4, K3, K4, HL2 & CB3

RELAY STAGING:

1 SSR
2 K2
3 K3
4 K4

ZONE RELAYS:

K5 – MASTER
K6 – ZONE 1
K7 – ZONE 2
K8 – ZONE 3
K9 – ZONE 4

INDICATION RELAY:

K10 – MANUAL RESET

WIRE COLOR CODE

BL	BLUE
BLW	BLUE/WHITE
BK	BLACK
BR	BROWN
BRY	BROWN/YELLOW
GY	GRAY
OR	ORANGE
OBK	ORANGE/BLACK
R	RED
RW	RED/WHT
RY	RED/YELLOW
VI	VIOLET
W	WHITE
WBL	WHITE/BLUE
WBK	WHITE/BLACK
Y	YELLOW
YG	YEL/GRN

NOTES

1. SENSOR CABLES AND CONNECTIONS NOT SHOWN.

COMPONENT CODE

CB	CIRCUIT BREAKER
E	ELEMENT
HL	MANUAL HI-LIMIT
AHL	AUTO HI-LIMIT
K	RELAY
PC	CIRCUIT BOARD
T	TAB TERMINAL
SC	SCREW TERMINAL
SSR	SOLID STATE RELAY

DECAL

UAW427 A

01/10/22

Electro Industries, Inc. Residential Limited Product Warranty

Effective November 1, 2009

Electro Industries, Inc. warrants to the original owner, at the original installation site, for a period of two (2) years from date of original purchase, that the product and product parts manufactured by Electro Industries, Inc. are free from manufacturing defects in materials and workmanship, when used under normal conditions and when such product has not been modified or changed in any manner after leaving the plant of Electro Industries, Inc. If any product or product parts manufactured by Electro Industries, Inc. are found to have manufacturing defects in materials or workmanship, such will be repaired or replaced by Electro Industries, Inc. Electro Industries, Inc., shall have the opportunity to directly, or through its authorized representative, examine and inspect the alleged defective product or product parts. Electro Industries, Inc. may request that the materials be returned to Electro Industries, Inc. at owner's expense for factory inspection. The determination as to whether product or product parts shall be repaired, or in the alternative, replaced, shall be made by Electro Industries, Inc. or its authorized representative.

Electro Industries, Inc. will cover labor costs according to the Repair / Replacement Labor Allowance Schedule for a period of ninety (90) days from the date of original purchase, to the original owner, at the original installation site. The Repair / Replacement Labor Allowance is designed to reduce the cost of repairs. This Repair / Replacement Labor Allowance may not cover the entire labor fee charged by your dealer / contractor.

TWENTY YEAR (20) LIMITED WARRANTY ON BOILER ELEMENTS AND VESSELS

Electro Industries, Inc. warrants that the boiler elements and vessels of its products are free from defects in materials and workmanship through the twentieth year following date of original purchase. If any boiler elements or vessels are found to have a manufacturing defect in materials or workmanship, Electro Industries, Inc. will replace them.

TWENTY YEAR (20) LIMITED WARRANTY ON SPIN FIN ELEMENTS

Electro Industries, Inc. warrants that the spin fin elements of its products are free from defects in materials and workmanship through the twentieth year following date of original purchase. If any spin fin elements are found to have a manufacturing defect in materials or workmanship, Electro Industries, Inc. will replace them.

FIVE YEAR (5) LIMITED WARRANTY ON OPEN WIRE ELEMENTS

Electro Industries, Inc. warrants that the open wire elements of its products are free from defects in materials and workmanship through the fifth year following date of original purchase. If any open wire elements are found to have a manufacturing defect in materials or workmanship, Electro Industries, Inc. will replace them.

ELECTRO INDUSTRIES
Monticello, Minnesota
800.922.4138
www.electromn.com

CONDITIONS AND LIMITATIONS:

1. This warranty is limited to residential, single family dwelling installations only. Any commercial or multi-unit dwelling installations fall under the Electro Industries Commercial Limited Product Warranty.
2. Electro Industries, Inc. shall not be liable for performance related issues resulting from improper installation, improper sizing, improper duct or distribution system, or any other installation deficiencies.
3. If at the time of a request for service the original owner cannot provide an original sales receipt or a warranty card registration then the warranty period for the product will have deemed to begin the date the product is shipped from the factory and **NOT** the date of original purchase.
4. The product must have been sold and installed by a licensed electrician, plumbing, or heating contractor.
5. The application and installation of the product must be in compliance with Electro Industries, Inc. specifications, as stated in the installation and instruction manual, and all state, provincial and federal codes and statutes. If not, the warranty will be null and void.
6. The purchaser shall have maintained the product in accordance with the manual that accompanies the unit. Annually, a qualified and licensed contractor must inspect the product to assure it is in proper working condition.
7. All related heating components must be maintained in good operating condition.
8. All lines must be checked to confirm that all condensation drains properly from the unit.
9. Replacement of a product or product part under this limited warranty does not extend the warranty term or period.
10. Replacement product parts are warranted to be free from defects in material and workmanship for ninety (90) days from the date of installation. All exclusions, conditions, and limitations expressed in this warranty apply.
11. Before warranty claims will be honored, Electro Industries, Inc. shall have the opportunity to directly, or through its authorized representative, examine and inspect the alleged defective product or product parts. Remedies under this warranty are limited to repairing or replacing alleged defective product or product parts. The decision whether to repair or, in the alternative, replace products or product parts shall be made by Electro Industries, Inc. or its authorized representative.

THIS WARRANTY DOES NOT COVER:

1. Costs for labor for diagnosis, removal or reinstallation of an alleged defective product or product part, transportation to Electro Industries, Inc., and any other materials necessary to perform the exchange, except as stated in this warranty. Replacement material will be invoiced to the distributor in the usual manner and will be subject to adjustment upon verification of defect.
2. Any product or product part that has been damaged as a result of being improperly serviced or operated, including, but not limited to, the following: operated during construction phase, with insufficient water or air flow; allowed to freeze; subjected to flood conditions; subjected to improper voltages or power supplies; operated with air flow or water conditions and/or fuels or additives which cause unusual deposits or corrosion in or on the product; chemical or galvanic erosion; improper maintenance or subject to any other abuse or negligence.
3. Any product or product part that has been damaged as a result of natural disasters, including, but not limited to, lightning, fire, earthquake, hurricanes, tornadoes or floods.
4. Any product or product part that has been damaged as a result of shipment or handling by the freight carrier. It is the receiver's responsibility to claim and process freight damage with the carrier.
5. Any product or product part that has been defaced, abused or suffered unusual wear and tear as determined by Electro Industries, Inc. or its authorized representative.
6. Workmanship of any installer of the product or product part. This warranty does not assume any liability of any nature for unsatisfactory performance caused by improper installation.
7. Transportation charges for any replacement product, product part or component, service calls, normal maintenance; replacement of fuses, filters, refrigerant, etc.

THESE WARRANTIES DO NOT EXTEND TO ANYONE EXCEPT THE ORIGINAL PURCHASER AT RETAIL AND ONLY WHEN THE PRODUCT IS IN THE ORIGINAL INSTALLATION SITE. THE REMEDIES SET FORTH HEREIN ARE EXCLUSIVE.

ALL IMPLIED WARRANTIES, INCLUDING WARRANTIES OF MERCHANTABILITY AND FITNESS FOR A PARTICULAR PURPOSE, ARE HEREBY DISCLAIMED WITH RESPECT TO ALL PURCHASERS OR OWNERS. ELECTRO INDUSTRIES, INC. IS NOT BOUND BY PROMISES MADE BY OTHERS BEYOND THE TERMS OF THESE WARRANTIES. FAILURE TO RETURN THE WARRANTY CARD SHALL HAVE NO EFFECT ON THE DISCLAIMER OF THESE IMPLIED WARRANTIES.

ALL EXPRESS WARRANTIES SHALL BE LIMITED TO THE DURATION OF THIS EXPRESS LIMITED WARRANTIES SET FORTH HEREIN AND EXCLUDE ANY LIABILITY FOR CONSEQUENTIAL OR INCIDENTAL DAMAGES RESULTING FROM THE BREACH THEREOF. SOME STATES OR PROVINCES DO NOT ALLOW THE EXCLUSION OR LIMITATION OF INCIDENTAL OR CONSEQUENTIAL DAMAGES, SO THE ABOVE LIMITATIONS OR EXCLUSIONS MAY NOT APPLY. PRODUCTS OR PARTS OF OTHER MANUFACTURERS ATTACHED ARE SPECIFICALLY EXCLUDED FROM THE WARRANTY.

THIS WARRANTY GIVES YOU SPECIFIC LEGAL RIGHTS, AND YOU MAY HAVE OTHER RIGHTS WHICH VARY UNDER THE LAWS OF EACH STATE. IF ANY PROVISION OF THIS WARRANTY IS PROHIBITED OR INVALID UNDER APPLICABLE STATE OR PROVINCIAL LAW, THAT PROVISION SHALL BE INEFFECTIVE TO THE EXTENT OF THE PROHIBITION OR INVALIDITY WITHOUT INVALIDATING THE REMAINDER OF THE AFFECTED PROVISION OR THE OTHER PROVISIONS OF THIS WARRANTY.